OPERATING AND MAINTENANCE MANUAL

MODEL 100 WICK

BOTTOM DRIVE WICK INSERTER

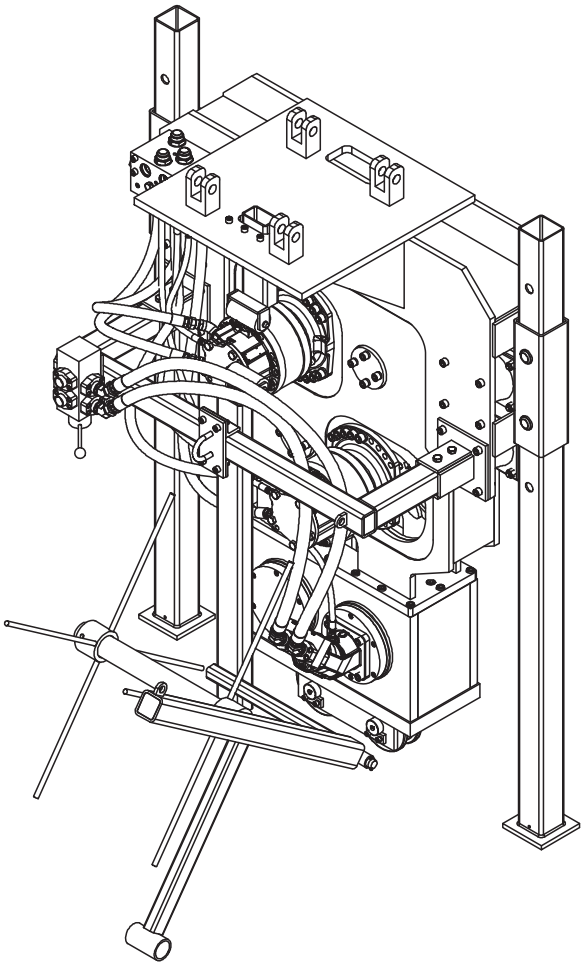

AMERICAN
PILEDRIVING
EQUIPMENT INC

MAN 100 WICK 201410

Copyright © 2011 American Piledriving Equipment Inc. All Rights Reserved

Revision Record

Change Number	Page Number	Date	Revision Description
1		6-23-11	Added 6 roll wick carrier
2	V-2&VIII-12	10-14	Added free wheel valves to the manifold asm
3		10-18	Added Wick Drain Mandrel Splice Specifications
4	VII-6	04-19	Added missing mandrel motor callout

Copyright © 2011 American Piledriving Equipment Inc. All Rights Reserved

APE MODEL 100 BOTTOM DRIVE
WICK INSERTER
MAN 100 WICK-200805

PREFACE

INFORMATION **This manual was prepared to acquaint the owner, operator and serviceman with the operation and maintenance of the vibratory driver/extractor. We strongly suggest that this manual be carefully studied before operating or undertaking any maintenance work on the unit. It is not meant to be all inclusive as to content, and any questions and/or doubt should be directed to APE before proceeding with any operation or maintenance.**

This manual is organized into two major categories.

The first category is for OPERATING INSTRUCTIONS of the unit and includes a GENERAL DESCRIPTION section, which presents a basic explanation of the driver/extractor specifications. The MAINTENANCE AND ADJUSTMENT section should be referred to for all servicing of equipment. All machines and equipment require systematic, periodic inspection and maintenance, if they are to perform satisfactorily.

The second category is for parts ordering and it includes both a PARTS LIST and a pictorial drawing of the assembly. Refer to the ORDERING PARTS section of the PARTS LIST for more specific procedures regarding parts ordering. Adherence of the listed procedures will insure receipt of the required part(s) with the minimal amount of delay or error.

APE reserves the right to update or revise this manual as required, check with APE for current release date.

Copyright © 2011 American Piledriving Equipment Inc. All Rights Reserved

MODEL 100
BOTTOM DRIVE
WICK INSERTER

Copyright © 2011 American Piledriving Equipment Inc. All Rights Reserved

MODEL 100
BOTTOM DRIVE
WICK INSERTER

Warranty

American Piledriving Equipment, Inc. J&M Foundation Equipment LLC
STANDARD WARRANTY

American Piledriving Equipment, Inc./J&M Foundation Equipment LLC (APE/J&M) warrants new products sold by it to be free from defects in material or workmanship for a period of one year after the date of delivery to the first user and subject to the following conditions:
APE/J&M's obligation and liability under this WARRANTY is expressly limited to repairing or replacing at APE/J&M's option, any parts which appear to APE/J&M upon inspection to have been defective in material or workmanship. Such parts shall be provided at
no cost to the user, at the business establishment of APE/J&M or the authorized APE/J&M distributor of the product during regular working hours. This WARRANTY, shall not apply to component parts or accessories of products not manufactured by APE/J&M and which carry the warranty of the manufacturer thereof, or to normal
maintenance (scraped and scived lube and fuel lines, worn cushion material in the drive base) or normal maintenance parts (such as fouled injectors, weakened check valve springs,
damaged grease zirts caused by use over time).
Replacement or repair parts installed in the product covered by this WARRANTY are warranted only for the remainder of the warranty as if such parts were original
components of said product. APE/J&M makes no other warranty, expressed or implied and makes no warranty of merchantability of fitness for any particular purpose.

APE's obligation under this WARRANTY shall not include any transportation charges, costs of installation, duty, taxes or any other charges whatsoever, or any liability for direct, indirect, incidental or consequential damage or delay. If requested by APE/J&M, products or parts for which a warranty claim is made are to be returned transportation
prepaid to APE/J&M. Any improper use, including operation after discovery of defective or worn parts, operation beyond rated capacity, substitution of any parts whatsoever, or parts not approved by APE/J&M or any alteration or repair by others in such manner as in APE/J&M's judgment affects the product materially and adversely, shall void this warranty.

ANY TYPE OF WELDING ON EQUIPMENT
WILL VOID THE WARRANTY

Refusal: Vibros: If the pile does not move one foot in 30 seconds of vibro operation at full speed. Resort to a larger vibro. APE/J&M equipment may exceed the refusal driving criteria for short periods of time as may be needed to penetrate hard soil layers or obstacles. In such cases, a heat gun is used to monitor the temperature of thebearings and related components to prevent use of the machine beyond 190 degrees. Contact APE/J&M or your local APE/J&M distributor for special instructions when faced with refusal conditions.

Refusal: Diesels: Do not exceed 10 blows per inch or 120 blows per foot. In cases of setting of the pile it is permitted to increase the blow count to 250 blows per foot, but only for one foot of driving penetration. Pile inspectors should consult the APE factory for permission to exceed these limits. Failure to do so will void the warranty. This standard specification is accepted by the DFI (Deep Foundations Institute) and the PDCA

(Pile Contractors Association) and by all manufacturers of pile driving equipment.

Copyright © 2011 American Piledriving Equipment Inc. All Rights Reserved

MODEL 100
BOTTOM DRIVE
WICK INSERTER

TABLE OF CONTENTS

I.	GENERAL DESCRIPTION	PAGE
	A. General	I- 1
	B. Vibration Gear Box	I- 2
	C. Vibration Suppressor	I- 2
	D. Wick Carrier	I- 2
	E. Mandrel Guide	I- 2
	F. Legs	I- 2
	G. Leader System	I- 2
	H. Specifications	I- 3
II.	PREPARATION FOR OPERATION	
	A. General	II- 1
	B. Safety Precautions	II- 1
	C. Rigging of Vibrator	II- 3
	D. Connection of Hydraulic Hoses	II- 4
	E. Filling Vibrator Pressure Hose	II- 5
III.	OPERATING INSTRUCTIONS	
	——Feroy Selector Valve	III- 1
	A. Completion of Set-Up and Maintenance	III- 2
	B. Feroy Selector Valve	III- 2
	C. Driving / Extracting Mandrel	III- 2
	D. Changing Frequency	III- 3
	E. Shut Down	III- 3
IV.	MAINTENANCE AND ADJUSTMENTS	
	A. General	IV- 1
	B. Daily	IV- 1
	C. 100 Hours, 500 Hours and Other	IV- 2
	D. Severe Conditions	IV- 2
	E. Lubrication	IV- 3
	F. Bolt Torque Information	IV- 5

Copyright © 2011 American Piledriving Equipment Inc. All Rights Reserved

TABLE OF CONTENTS

V.	HYDRAULIC CIRCUITRY	PAGE
	A. Vibrator Drive	V- 1
	Hydraulic Schematic	V- 2
	B. Hydraulic Components List	V- 3
VI.	GENERAL DATA	
	A. Abbreviations	VII- 1
	B. Screws and Bolts	VII- 1
	C. Serial Number Locations	VII- 2
VII.	ORDERING PARTS	
	A. Procedure	VII- 1
	B. Fitting Description Key	VII- 2
	Fitting Style Selector Chart - SC1	VII- 3
	C. Hose Description Code	VII- 4
	D. Parts Identification	VII- 5
	Parts Lists and Drawings	VII- 6
	E. Miscellaneous Accessories	VII- 26
	F. Recommended Spare Parts	VII- 27
	G. Recommended Tightening Torque	VII- 29

Copyright © 2011 American Piledriving Equipment Inc. All Rights Reserved

MODEL 100
BOTTOM DRIVE
WICK INSERTER

Copyright © 2011 American Piledriving Equipment Inc. All Rights Reserved

A. GENERAL

The APE Model 100 BOTTOM DRIVE WICK INSERTER is a vibratory wick drain inserter. Designed to insert wick drain by forcing a wick threaded mandrel into wet soil while vibrating through tough soil.

The Model 100 Wick operates in a frequency range of 800 to 1700 vibrations per minute to provide maximum mandrel penetration rates in a wide variety of soils. Produces 23.7 tons (211 kN) of dynamic force and 27.8 tons (247 kN) of static driving force.

The wick inserter unit consists of six major components. (1) The vibration gear box, (2) the vibration suppressor which contains mandrel control motors, (3) the wick carrier assembly, (4) the leg assembly, (5) mandrel guide and (6) the lead system (not shown).

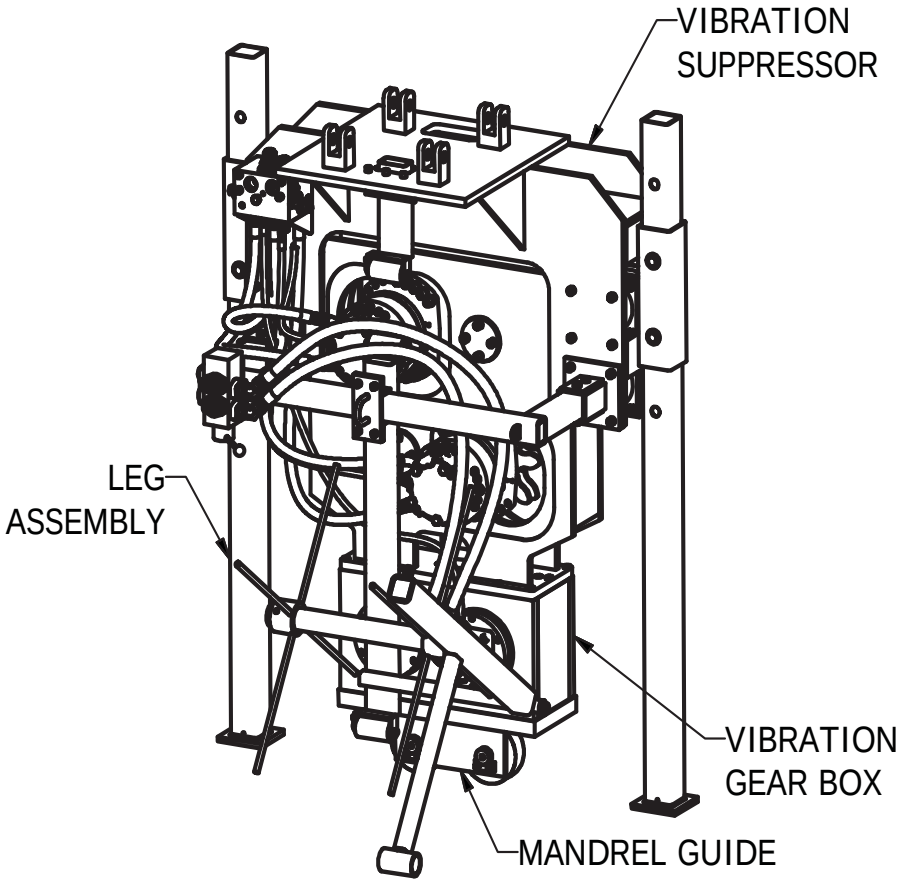

Fig. 1-1

Copyright © 2011 American Piledriving Equipment Inc. All Rights Reserved

I. GENERAL DESCRIPTION

B. VIBRATION GEAR BOX

The vibration gear box contains two eccentric weights which rotate in a vertical plane to create vibration (Dynamic Force). The eccentric weights are driven by a hydraulic motor.

C. VIBRATION SUPPRESSOR

The vibration suppressor contains 8 rubber elastomers to isolate the vibration case from the leads. The mandrel insert / extract motors are mounted here. A pair of hydraulic motors with a sprocket assembly mounted to the motors force the mandrel into the ground as well as removing the mandrel from the ground. There is a roller assembly that works together with the sprockets keeping the mandrel engaged with the sprockets.

D. WICK CARRIER

The wick carrier assembly is designed to carry six spools of wick drain. This assembly has capability to hold one spool on the center of the wick tube and five to the side of center of the wick tube. While you line-up the first spool of wick to the wick tube the rest of the carrier can hold the spare spools of wick. When the center spool is close to being empty mechanically join the end of the wick to the beginning of a new spool of wick. When the center spool is empty, remove spool bracket and wick roll tube. Re-install spool bracket, slide the wick spools so that the first spool is in-line with the wick tube and slide the other spool bracket over to keep the remaining wick spools in place. Continue to mechanically joining the end of a spool to the beginning of the next spool and adjusting the spool bracket.

E. MANDREL GUIDE

The mandrel guide is a set of rollers at the bottom of the vibration case used to maintain position of the mandrel fore and aft as well as right and left. The mandrel is a rectangular steel tube that is used to thread the wick drain into the soil.

F. LEGS

The legs are to rest upon the ground to stabilize the wick inserter while inserting wick or removing the mandrel. They are adjustable to suit the job site and operators preference of height for best visibility.

G. LEADER SYSTEM

The leader system is a lattice system used to support and guide the mandrel and wick drain. This system has a trough for the mandrel to run in maintaining it's location in relationship to the wick inserter assembly. A set of lugs and pins connect the leader system together as well as the leader system to the inserter assembly. On top of the leader system is a wick guide bracket that aligns the wick drain that goes to the top of the leader system and over to top of the mandrel.

Copyright © 2011 American Piledriving Equipment Inc. All Rights Reserved

I. GENERAL DESCRIPTION

H. SPECIFICATIONS

1. Constant improvement and engineering progress make it necessary that we reserve the right to make specification changes without notice.

Always consult APE in your area for current or additional information you may require.

2. Model 100 Bottom Drive Wick Inserter

INFORMATION

Type. .....Hydraulic
Frequency .....1000-1700 VPM
Max Dynamic Force .....23.7 Tons (211kN)
Static (Crowd) Force ..... 27.8 Tons (247kN)
Weight .....8,500# lbs. (3,855 kg)
Length [L] .....84in. (213 cm)
Width [W] .....47 in. (119 cm)
Whole Width [WW] .....85 in. (216 cm)
Height [H] .....109 in. (276.8 cm)

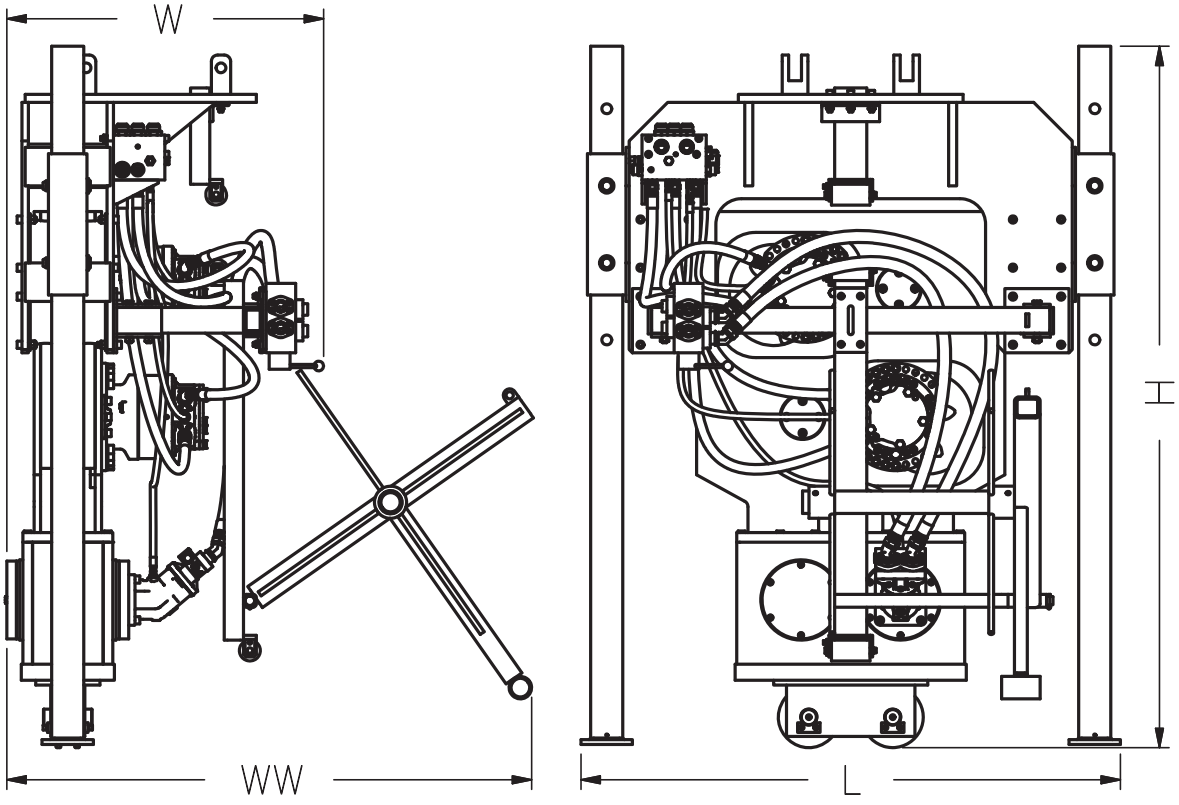

Fig. 1-2

Copyright © 2011 American Piledriving Equipment Inc. All Rights Reserved

MODEL 100
BOTTOM DRIVE
WICK INSERTER

OPERATING INSTRUCTIONS

Copyright © 2011 American Piledriving Equipment Inc. All Rights Reserved

II. PREPARATION FOR OPERATION

A. GENERAL

WARNING **When unloading and unpacking the bottom drive wick inserter, use extreme care. For your protection, make a thorough inspection of the unit immediately on delivery. In case of any damage or shortage, notify the transit agent at once and have the delivering carrier make a notation on the freight bill.**

B. SAFETY PRECAUTIONS

Safety is very important and is everyone's responsibility that operates this equipment or services this equipment.

WARNING Use the following safety precautions as a general guide to safe operations, when in doubt consult APE before proceeding with any operation that may produce an unsafe result. These safety guidelines do not constitute all possible safety issues that may occur during operation or maintenance.

1. Read this manual thoroughly before operating or working on the equipment.
2. Read and follow any safety instructions in the excavator's operators manual.
3. Only well trained and experienced personnel should attempt to operate or maintain this equipment.
4. Never adjust, lubricate or repair the unit when it is in operation, or lifted above ground level.
5. Never remove, paint over or cover warning or safety labels. If labels become damaged or unreadable, replace immediately.
6. All personnel should wear approved safety clothing, including **HARD HATS, SAFETY SHOES, SAFETY GLASSES** and **HEARING PROTECTION** when in the vicinity of this machinery.
7. Do not stand any closer than 15 feet to this equipment when it is in operation.
8. Parts may loosen and fall. Never stand under operating, or elevated, equipment.
9. When maintaining or repairing the equipment, never substitute parts not supplied, or approved in writing, by APE.
10. Do not weld, or flamecut,onthisequipment.
11. Never use or store flammableliquidsonorneartheengine.
12. Insure that all lifting equipment, including cranes, wire rope, slings, hooks, shackles, etc., are properly sized for the worst case loads anticipated during operations.
13. If there are any questions about the weights, speci fications,orperformanceofthe unit, contact APE before handling or operating the equipment.
14. If the equipment is to be used for anything other than inserting plumb wick drains, contact APE before using the unit.

Copyright © 2011 American Piledriving Equipment Inc. All Rights Reserved

II. PREPARATION FOR OPERATION

B. SAFETY PRECAUTIONS (CONTINUED)

14. Insure that ground vibrations will not damage or collapse adjacent structures or excavations.
15. Remove all tools, parts and electrical cords before starting the unit.
16. When operating in an enclosed area, pipe exhaust fumes outside. Continued breathing of exhaust fumes may be fatal.
17. When servicing batteries, do not smoke or use open flames in the vicinity. Batteries generate explosive gas during charging. There must be proper ventilation when charging batteries.
18. When filling fuel tank, do not smoke or use open flame in the vicinity.
19. If abnormal equipment operation is observed, discontinue use immediately and correct the problem.
20. Do not adjust, or set, hydraulic pressures higher or lower than those specified in this manual.
21. Never operate this equipment with hydraulic hoses that are damaged or “kinked”. Replace damaged hoses immediately.
22. Do not lift, or support, hydraulic hoses with wire rope slings.
23. Do not pull on, or attempt to move equipment, with hydraulic hoses.
24. Do not attempt to locate hydraulic leaks with your hands. High pressure hydraulic leaks can penetrate the skin, causing severe damage, blood poisoning and infection. Do not attempt to repair leaks while the equipment is in operation.
25. Do not attempt to tighten, or loosen, fittings or hoses when the machine is in operation.
26. A properly maintained fire extinguisher, suitable for oil fires, must be kept in the immediate vicinity of equipment operations.
27. When moving or transporting this equipment, insure that the vehicle or vessel is of sufficient capacity to handle the load, and that the equipment is properly tied down.
28. Be sure that all equipment parts are tight, or properly secured, before shipment. Unsecured parts may vibrate loose and fall, during transport, causing injury or property damage.
29. Keep crane boom, mandrel, lead system, wire rope and other equipment at least 15’ (5M) from electrical power lines, transformers and other electrical equipment, or at such distance as required by applicable safety codes.

Copyright © 2011 American Piledriving Equipment Inc. All Rights Reserved

II. PREPARATION FOR OPERATION

B. SAFETY PRECAUTIONS (CONTINUED)

30. Rounded or damaged bolt heads or nuts should be replaced so that proper torque values may be obtained. Proper torque values are necessary to prevent parts on this equipment, leads and crane boom from loosening and falling. Refer to Torque Chart, in this manual, for proper values.
31. Never induce mandrel crowd or extraction force before starting the unit in vibration. Always start both driving and extraction of mandrel insertion / extraction circuit in neutral.
32. Keep hands away from mandrel sprocket assemblies.
33. Keep hands away from vibrator suppressor during operation. Clearances may change causing pinch points.
34. When driving “batter” wick drain insure that the lead system, and crane boom, have sufficient bending strength to handle the worst case load. Consult APE.

REMEMBER, SAFETY IS EVERYONE’S BUSINESS.

C. RIGGING OF INSERTER

An adapter has been designed for the entire assembly for the original project to a certain excavator. The pins supplied for the adapter and lead system are the only pins to be used and installed with supplied fastening hardware.

All rigging of either the inserter must be done in accordance with standard rigging guide lines set forth in ASTM standards; APE does not assume responsibility for incorrect rigging or procedures.

Copyright © 2011 American Piledriving Equipment Inc. All Rights Reserved

II. PREPARATION FOR OPERATION

D. CONNECTION OF HYDRAULIC HOSES

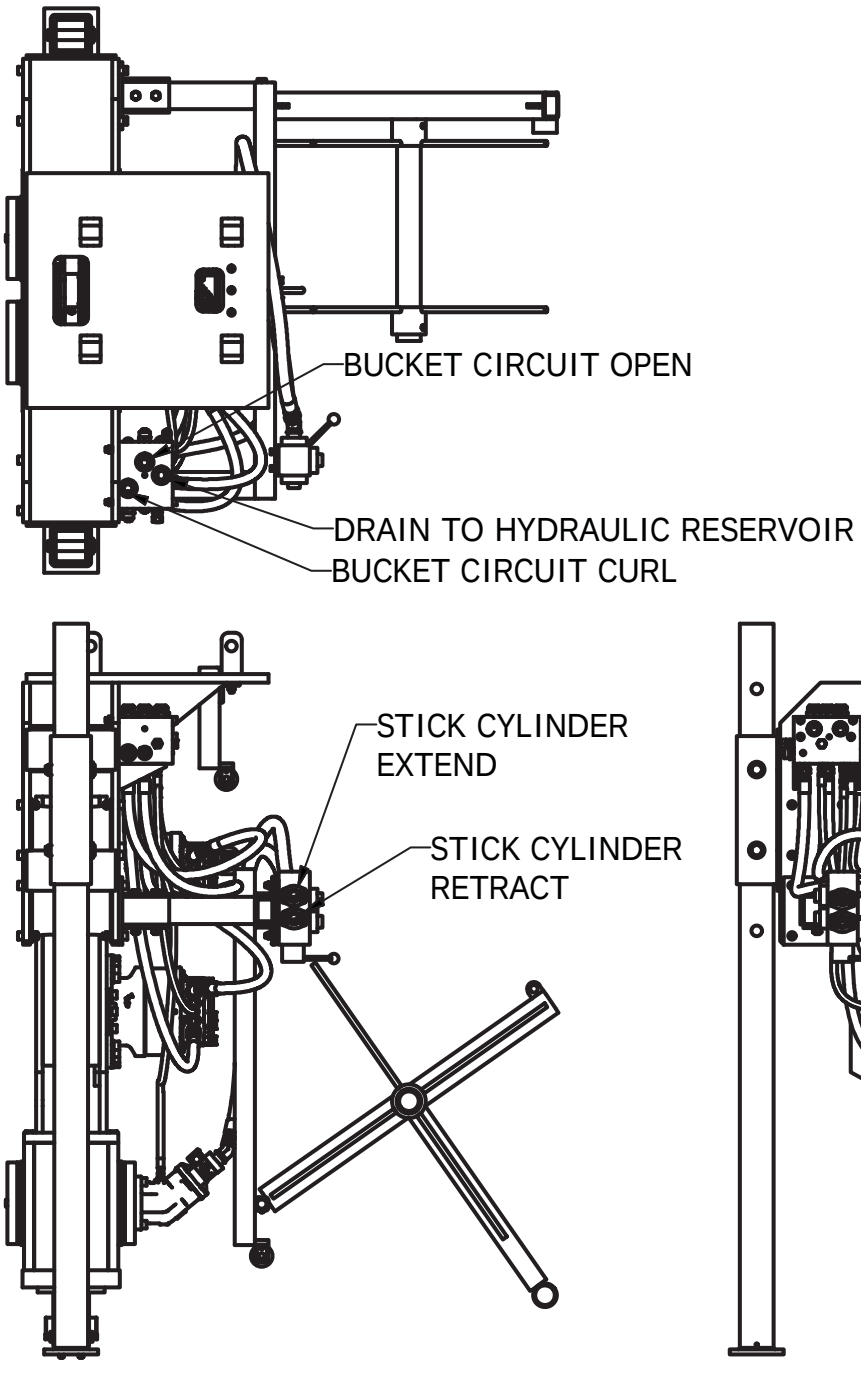

Fig. 2-1

Copyright © 2011 American Piledriving Equipment Inc. All Rights Reserved

II. PREPARATION FOR OPERATION

D. CONNECTION OF HYDRAULIC HOSES (CONTINUED)

1. Connection of hoses inserter.

a. The inserter gear box motor and crowd / extraction motors are connected to the excavator by five hydraulic hoses (Fig. 1) on the previous page.

The excavator must be shut down during connection of the hydraulic hoses.

b. Clean connection fittings with a lint-free cloth before making connections.

c. Make sure that the connectors are fully tightened with wrenches.

2. Connection of hoses at excavator.

a. The vibrator circuits that control the stick and bucket will be used.

Use caution when bleeding any hydraulic lines, even low hydraulic pressure can cause injury to personnel.

E. FILLING VIBRATOR PRESSURE HOSE

1. The vibrator is usually shipped with the vibrator hydraulic hoses full of fluid and the unit may be used immediately. However, if the pressure hose has been removed from the vibrator, the hose should be allowed to fill with hydraulic fluid prior to full speed operation.

2. Read SECTION III - OPERATING INSTRUCTIONS.

3. Start and warm up the diesel engine in accordance with SECTION III-C - STARTING AND WARMING UP ENGINE. Hold the vibrator in a vertical position.

4. With the engine warmed up and running at 1000 RPM, turn and hold the vibrator switch REVERSE. The hoses will fill in approximately 5 minutes.

If vibration begins in the vibrator, stop immediately and recheck hose connections.

Copyright © 2011 American Piledriving Equipment Inc. All Rights Reserved

MODEL 100
BOTTOM DRIVE
WICK INSERTER

OPERATING INSTRUCTIONS

Copyright © 2011 American Piledriving Equipment Inc. All Rights Reserved

III. OPERATING INSTRUCTIONS

FEROY SELECTOR VALVE

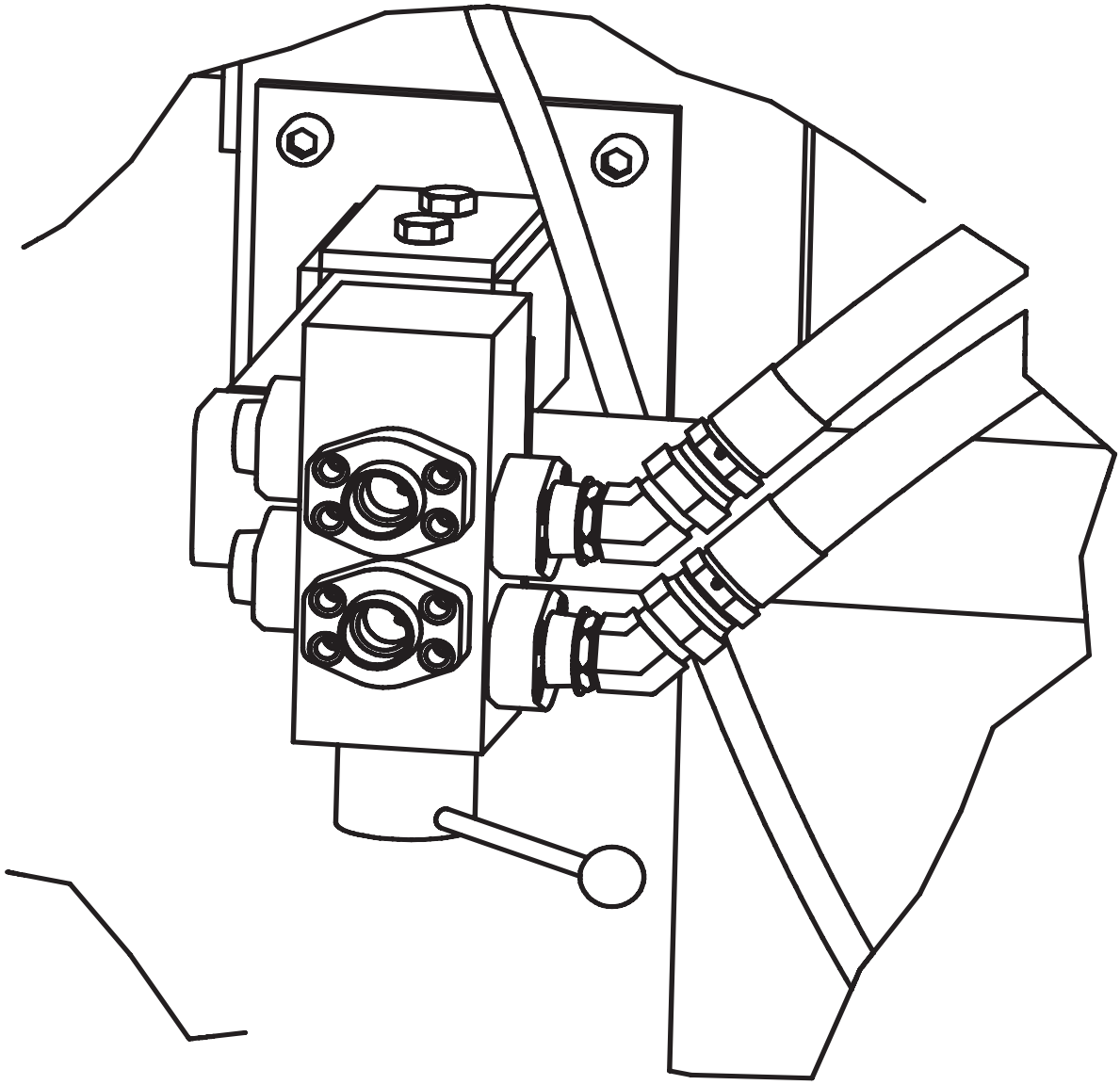

Handle shown in the position to operate the vibration gear box drive motor.

Fig. 3-1

Copyright © 2011 American Piledriving Equipment Inc. All Rights Reserved

III. OPERATING INSTRUCTIONS

A. COMPLETION OF SET-UP AND MAINTENANCE

1. Complete all preparation as described in Section II.

2. Read Section IV - MAINTENANCE AND ADJUSTMENTS and perform any required maintenance.

B. FEROY SELECTOR VALVE

1. The Feroy selector valve controls the cylinder that positions the lead system fore and aft angle and the vibration gear box motor.

2. When the handle of the Feroy selector valve is turned to the left, it is in the position to adjust the lead system. Rotating the handle to the right as shown in Fig 3-1 oil flow will be directed to the vibration gear box motor.

⚠CAUTION

3. The adjustment of the lead system should only be done when NO mandrel is below the surface of soil.

C. DRIVING / EXTRACTING MANDREL

1. Driving mandrel into the soil by using the mandrel drive motors is to be used until resistance stops the mandrel. Stop trying to insert the mandrel, start the vibration gear box and continue to run the mandrel drive motors. When the mandrel begins to move with less resistance stop the vibration gear box and continue driving the mandrel.

2. Extracting mandrel out of the soil works just the opposite as driving mandrel. The support legs will help maintain the vertical position of the entire wick machine.

Copyright © 2011 American Piledriving Equipment Inc. All Rights Reserved

III. OPERATING INSTRUCTIONS

D. CHANGING FREQUENCY

1. In order to provide maximum flexibility in achieving optimum mandrel penetration and extraction rates, the frequency of the vibration gear box is adjustable. This adjustment is made by the amount of hydraulic oil provided to the motor through the control valve handle.

2. The frequency can be varied from 800 to 1650 vibrations per minute by changing engine speed or the position of the control valve handle. Engine speed is changed with the ENGINE THROTTLE and the position of the control valve handle.

G. SHUT DOWN

1. Stop the vibration gear box and mandrel drive motors.

2. Allow the diesel engine to run for five minutes at 1500 RPM.

3. Reduce speed to low idle for about thirty seconds.

4. Stop the engine by turning the ENGINE START switch to OFF.

Copyright © 2011 American Piledriving Equipment Inc. All Rights Reserved

MODEL 100
BOTTOM DRIVE
WICK INSERTER

OPERATING INSTRUCTIONS

Copyright © 2011 American Piledriving Equipment Inc. All Rights Reserved

IV. MAINTENANCE AND ADJUSTMENTS

A. GENERAL

Preventive maintenance includes normal servicing that will keep the wick inserter in peak operating condition and prevent unnecessary trouble from developing. This servicing consists of periodic lubrication and inspection of the moving parts and accessories of the unit.

Lubrication is an essential part of protective maintenance, controlling to a great extent the useful life of the unit. Different lubricants are needed and some components in the unit require more frequent lubrication than others. Therefore, it is important that the instructions regarding types of lubricants and frequency of their applications be closely followed.

To prevent minor irregularities from developing into serious conditions that might involve shut-down and major repair, several other services or inspections are recommended for the same intervals as the periodic lubrications. The purpose of these services or inspections is to assure the uninterrupted operation of the unit.

Thoroughly clean all lubrication fittings, caps, filler and level plugs and their surrounding surfaces before servicing. Prevent dirt from entering with lubricants and coolants. The intervals given in the schedule are based on normal operation. Perform these services, inspections, etc., more often as needed for operation under abnormal or severe conditions.

B. DAILY

1. Check the entire unit prior to and during set-up each day or at the beginning of each shift.

2. Prior to starting the engine of the excavator or at the beginning of each shift, check the following items:

a. Visibly inspect all bolts, nuts and screws, to insure they are tight.

Vibration loosens bolts - check carefully.

b. Check the oil level in the vibration gear box and add oil if required. The oil level should be in the middle of the sight glass. Change oil If milky or contaminated. DO NOT OVERFILL

It is absolutely imperative that no dirt or other impurities be permitted to contaminate the hydraulic fluid. Any contamination will drastically shorten the life of the high-pressure hydraulic system.

Copyright © 2011 American Piledriving Equipment Inc. All Rights Reserved

IV. MAINTENANCE AND ADJUSTMENTS

B. DAILY (CONTINUED)

c. Visually check all hoses for signs of damage or cuts that might cause hose failure during operation. Be sure all connections are tight.
d. Visually inspect all suppressor elastomers and elastomer bolts.
e. Grease the rollers in the mandrel guide assemblies and the rollers in the roller guide assembly.
f. Perform all daily maintenance checks and lubrication indicated in the excavator's OPERATION GUIDE.

3. After engine start-up, check the following:

a. Check all hydraulic hoses for leaks. Make sure they hang freely with no kinks.
b. Check hydraulic manifolds for leaks.

C. 100 HOURS, 500 HOURS AND OTHER

1. Every 100 hours, drain and add new lubricant in the vibration gear box.

2. Perform all maintenance checks and lubrication indicated in the excavator's OPERATION GUIDE.

D. SEVERE CONDITIONS

The servicing intervals specified are based on normal operating conditions. Operation under severe or unusual conditions will require some adjustments in servicing intervals.

1. When the average temperature is above 80°F(26°C) or below -10°F(-23°C), reduce service time intervals by one-half of those specified above.

2. When operating in the presence of dust or sand, reduce service time intervals by one-half of those specified.

3. When operating in excess of twelve hours per day, reduce service time intervals by one-half of those specified.

4. When operating in air with high moisture or salt, the servicing intervals need not usually be changed. However, the unit should be inspected weekly to determine if additional servicing be required. Also, have hydraulic fluid tested quarterly.

Copyright © 2011 American Piledriving Equipment Inc. All Rights Reserved

IV. MAINTENANCE AND ADJUSTMENTS

E. LUBRICATION

1. Hydraulic System

To maintain the maximum operating efficiency in the precision parts of the hydraulic system, it is extremely important to eliminate factors which can cause breakdowns or unsatisfactory performance in the system. Among the most common of these factors are rust, corrosion, contamination and products of oil deterioration. Most problems can be minimized or avoided simply by maintaining a disciplined preventive maintenance program.

Some simple steps to follow as part of that program are:

a. Keep stored oil dry and clean at all times and always store in clean containers.
b. Always clean tools, spouts, lids, funnels, etc. when used in conjunction with the transfer of oil.
c. Never put dirty oil into the hydraulic system. Use only clean, uncontaminated oil. Never return to the system any fluid which has leaked out.

NOTE: Foreign material in the hydraulic system can drastically effect the life and operation of many hydraulic component parts.

d. Clean or replace filter elements at the first indication that they are dirty or ineffective.

2. Vibration Gear Box

The fluid level is easily read through the sight glass located at the lower center of the vibration case on the motor side. Lubricating oil may be added when necessary, through the hole in the vibration case top plate after removing the 1” pipe plug. To drain the case, remove a 1” pipe plug at the end of the base plate. Tilt the case for complete drainage. The capacity of gear oil is 9 quarts.

Copyright © 2011 American Piledriving Equipment Inc. All Rights Reserved

Copyright © 2011 American Piledriving Equipment Inc. All Rights Reserved

IV. MAINTENANCE AND ADJUSTMENTS

E. LUBRICATION (CONTINUED)

3. The preferred lubricating oil for APE vibration gear boxes is “High Moly” oil (Schaeffer 268).

a. The vibration gear box lubricant installed at the factory is SCHAEFFER 268 but the following gear lubes may be used when changing lubricants:

FIRST Preference Group:

SCHAEFFER	268

SECOND Preference Group:

MOBIL	SHC 629
BORON	Gearep 140
CHEVRON	Gear Comp. NL460
CITGO	Premium MP 85W-140
CITGO	Standard MP 85W-140

THIRD Preference Group (Natural Petroleum Base):

AMOCO	Perma Gear EP140
ARCO	Pennant NL 460
CONOCO	EP 460
EXXON	Spartan EP 460
PHILLIPS	AP 140

SCHEAFFER 268 Lubricant is available from APE in five gallon cans.

F. BOLT TORQUE INFORMATION

Torque, in foot-pounds, is determined by the length of the wrench handle (in feet) multiplied by the weight (or force in pounds) applied at the end of the handle. For example, if the wrench is one foot long and five pounds of force is applied at the end of the handle, the total torque applied would be five foot pounds. A six inch wrench would require ten pounds of force to obtain five foot pounds of torque.

The only way to actually tighten high strength bolts is with a torque wrench. Proper use of the torque wrench is important. To obtain the listed torques, a steady pull should be exerted to the handle until the desired torque is reached.

Copyright © 2011 American Piledriving Equipment Inc. All Rights Reserved

Copyright © 2011 American Piledriving Equipment Inc. All Rights Reserved

V. HYDRAULIC CIRCUITRY

A. VIBRATOR DRIVE

With the diesel engine running and the feroy selector valve in the “RUN VIBRO” position as shown in Fig. 3-1, hydraulic oil from the CURL bucket circuit is to run the vibro motor.

Pulling the joystick fully and holding it to CURL bucket position sends hydraulic oil to the VIBRATOR MOTOR (M3).

Full motor speed is reached within a few seconds and the motor maximum drive pressure is limited to approximately 5000 PSI (345 Bar) by the bucket system relief valve. Oil exiting VIBRATOR MOTOR (M3) returns to the unit. Case drain oil from the motors returns to the reservoir after being filtered by CASE DRAIN RETURN FILTER (F1). Case drain pressure is limited to 50 PSI (3.4 Bar) by the CASE DRAIN RELIEF VALVE (RV3).

Returning the Curl Bucket joystick to the NEUTRAL position stops the hydraulic oil flow to the VIBRATOR MOTOR (M3). The vibrator stops vibrating.

B. MANDREL DRIVE

With the diesel engine running and the auxiliary valve ready to be used, hydraulic oil from the auxiliary valve is to run the mandrel motors.

Pushing the joystick slowly and holding it sends hydraulic oil to the MANDREL MOTORS (M1 & M2) which will lower the mandrel into the ground. Pulling the joystick slowly and holding it sends hydraulic oil to the MANDREL MOTORS (M1 & M2) which will raise the mandrel out of the ground. The position of the joystick from neutral determines the feed speed of the mandrel. The further from neutral the faster the speed.

Copyright © 2011 American Piledriving Equipment Inc. All Rights Reserved

V. HYDRAULIC CIRCUITRY

HYDRAULIC SCHEMATIC

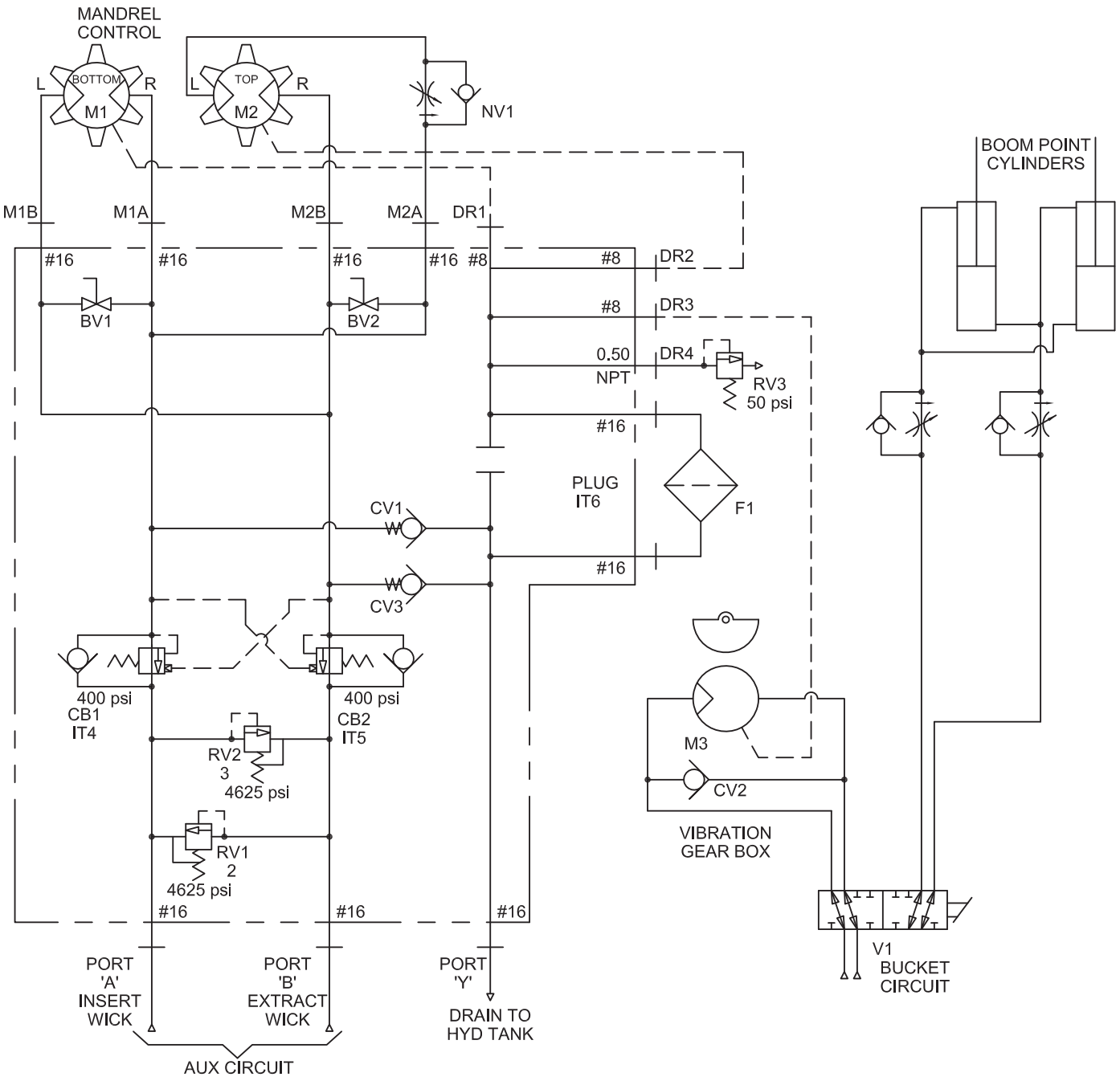

Copyright © 2011 American Piledriving Equipment Inc. All Rights Reserved

V. HYDRAULIC CIRCUITRY

B. HYDRAULIC COMPONENTS LIST

Notation	Description	Part Number	Page Number
BV1	Free Wheel Valve		VIII-13
BV2	Free Wheel Valve		VIII-13
CB1	Counterbalance Valve	352117	VIII-13
CB2	Counterbalance Valve	352117	VIII-13
CV1	Drain Check Valve	352115	VIII-13
CV2	Gear Box Anti-Cav Check Valve	352107	VIII-25
F1	Case Drain Filter		
NV1	Needle Valve		
M1	Mandrel Drive Motor	352001	VIII-7
M2	Mandrel Drive Motor	352001	VIII-7
M3	Gear Box Motor	122001A	VIII-9
RV1	Relief Valve	352119	VIII-13
RV2	Relief Valve	352119	VIII-13
RV3	Pop Off Relief Valve	321009	VIII-13
V1	Feroy Selector Valve	352021	VIII-7

Copyright © 2011 American Piledriving Equipment Inc. All Rights Reserved

Copyright © 2011 American Piledriving Equipment Inc. All Rights Reserved

VII. GENERAL DATA

A. ABBREVIATIONS

The abbreviations shown below are used throughout the parts lists and various other parts of the manual.

ASM.	Assembly
BHCS	Button Head Cap Screw
Cyl.	Cylinder
DC	Direct Current
FHCS	Flat Head Cap Screw
FLCS	Flanged Head Cap Screw
HC	High Collar
HHCS	Hex Head Cap Screw
HHPP	Hex Head Pipe Plug
HSSS	Hex Socket Set Screw
Hyd.	Hydraulic
Lg.	Long
mm	Millimeter
Mtg.	Mounting
NPT.	National Pipe Thread
PHMS	Phillips Head Machine Screw
P/N	Part Number
Qty.	Quantity
RHMS	Round Head Machine Screw
Sch.	Schedule
SHCS	Socket Head Cap Screw
SHPP	Socket Head Pipe Plug
SHSS	Socket Head Shoulder Screw
S/N	Serial Number
Sol.	Solenoid

B. SCREWS AND BOLTS

1. Practically all connections on the unit are made with socket head (Allen) cap screws. These high-strength screws are available at most industrial supply houses.
2. Screws and bolts are designated in the PARTS LIST in abbreviated form. (Refer to sub-section A, above, for specific abbreviations.) Listed below is a typical screw description: 0.50 - 13 UNC X 1.50 LG SHCS

0.50 = Diameter	13 UNC = Threads Per Inch
1.50 LG = Length	SHCS = Screw Type Abbreviation

Copyright © 2011 American Piledriving Equipment Inc. All Rights Reserved

VII. GENERAL DATA

C. SERIAL NUMBER LOCATIONS

1. The following units are serial numbered separately:

a. Vibrator

Copyright © 2011 American Piledriving Equipment Inc. All Rights Reserved

VIII. ORDERING PARTS

A. PROCEDURE

1. When ordering parts, **be sure to include the model and serial number** of the unit or component. Confirm all telephone orders immediately to avoid duplicating shipment.

2. ORIGINAL EQUIPMENT; Where component serial numbers are given, these apply only to equipment and components originally furnished with the unit. Where equipment has been changed or upgraded these numbers may not be an adequate description.

3. SHIPMENT; State to whom shipment is to be made and method of shipment desired, otherwise our own judgement will be used.

4. SHORTAGES; Claims for shortages or errors should be made immediately upon receipt of parts. No responsibility will be assumed for delay, damage or loss of material while in transit. Broken, damaged or lost material should be refused or a full description made of damage or loss to the carrier agent on the freight or express bill.

5. RETURN OF PARTS; If for any reason you desire to return parts to the factory or to any distributor from whom these parts were obtained, you must first secure permission to return the parts. Shipping instructions will be given along with this permission. A ten percent handling charge must be assessed against the returned shipment unless an error is made by the factory or by the distributor when filling your order.

Copyright © 2011 American Piledriving Equipment Inc. All Rights Reserved

VIII. ORDERING PARTS

B. FITTING DESCRIPTION KEY

FITT 2 L – 16 M 12 J 00 0 – 00L 0 0 0 1

SELECTOR INDEX
2 – INCH FITTING
9 – METRIC FITTING

CONFIGURATION OR SHAPE OF FITTING
S – STRAIGHT FITTING
L – 90 Deg. ELBOW
V – 45 Deg. ELBOW
T – TEE
C – CAP
P – PLUG
U – UNION
X – CROSS
(FOURTH END FITT'G REQ'D.)

FIRST END SIZE
* IN 1/16THS OF AN INCH (INDEX 2)
IN MILLIMETERS (INDEX 9)
SEE GENERAL SPECIFICATION SHEET FOR SEQUENCE OF ORDER

FIRST END FITTING STYLE
SEE FITTING STYLE SELECTOR CHART SC–1

SECOND END SIZE
IF APPLICIABLE – SEE FIRST END SIZE

SECOND END FITTING STYLE
IF APPLICABLE – SEE FIRST END FITTING STYLE

THIRD END SIZE
IF APPLICABLE - SEE FIRST END SIZE

THIRD END FITTING STYLE
IF APPLICABLE – SEE FIRST END SIZE

MATERIAL
1 – CARBON STEEL
2 – BRASS
4 – STAINLESS STL
5 – AAR MAL IRON
6 – MALEABLE IRON
8 – FORGED STEEL

SPECIAL NOTATIONS

PRESSURE RATING
0 – NONE
1 – 125 LB.
3 – SCH 40
4 – SCH 80

INSTALLATION AID OR STYLE OF HEAD
0 – NOT APPLICABLE
H – REGULAR HEX
Q – SQUARE HEAD (EXT.)
R – SQUARE HEAD (INT.)
S – HEX HEAD (INT SOCKET)
T – HEX HEAD (EXT.)

LENGTH CODE
(ELBOWS & NIPPLES)
__L – LONG (ELBOW)
__X – EXTRA LONG (ELBOW)
__C – CLOSE (NIPPLE)

PIPE NIPPLES (LONG) ONLY
IN DEC. INCHES FOR INDEX 2
050 = 5.0 INCHES
105 = 10.5 INCHES

IN MILLIMETERS FOR INDEX 9
120 = 12.0 MILLIMETERS
084 = 8.4 MILLIMETERS

FOURTH END SIZE & FITTING STYLE
(CROSSES ONLY)
SEE FIRST END FITTING SIZE OR END STYLE

* EXCEPTIONS
90 = 10′ 96 = 6″
92 = 12′ 98 = 8″
94 = 14′ 99 = NON CODE SIZE

Copyright © 2011 American Piledriving Equipment Inc. All Rights Reserved

B. FITTING DESCRIPTION KEY (CONTINUED)

FITTING STYLE SELECTOR CHART

SC-1

FOR END FITTING STYLE SELECTION

M	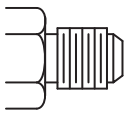	JIC MALE 37 Deg. FLARE
P	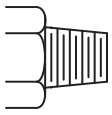	MALE PIPE NPT
R	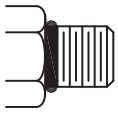	S.A.E. MALE O–RING (& ADJUSTABLE)
B	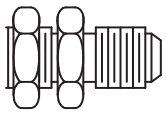	JIC MALE 37 Deg. FLARE BULKHEAD
D	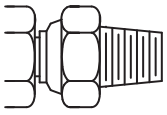	MALE PIPE NPT SWIVEL
S	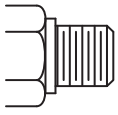	B.S.P. MALE PIPE
T	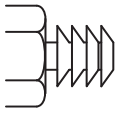	HOSE BARB

J		JIC FEMALE 37 Deg. FLARE (& SWIVEL)
Q	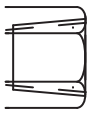	FEMALE PIPE NPTF
K	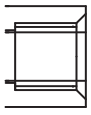	S.A.E. FEMALE O–RING
N	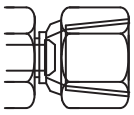	FEMALE PIPE NPSM–SWIVEL
F	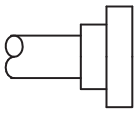	SPLIT FLANGE 3000 PSI. CODE 61
H	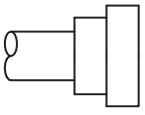	SPLIT FLANGE 6000 PSI. CODE 62

Copyright © 2011 American Piledriving Equipment Inc. All Rights Reserved

VIII. ORDERING PARTS

C. HOSE DESCRIPTION CODE

The HOSE DESCRIPTION CODE is a 24 digit number enabling easier and quicker identification whenever a hose replacement is desired. The key below explains the structure of the coded number in detail.

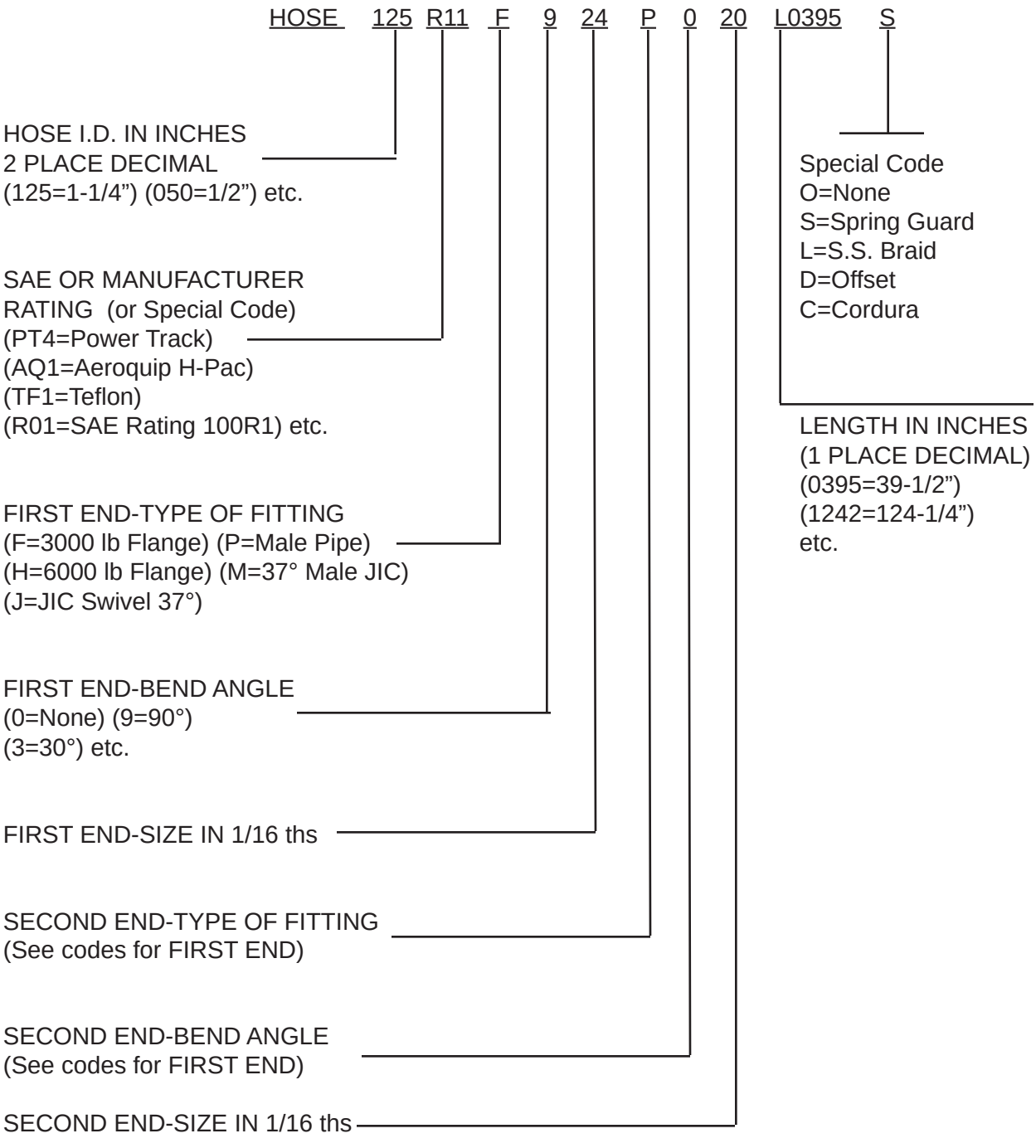

Copyright © 2011 American Piledriving Equipment Inc. All Rights Reserved

VIII. ORDERING PARTS

D. PARTS IDENTIFICATION

1. Parts lists and drawings are included on the following pages for the equipment components shown below:

a.	BOTTOM DRIVE INSERTER	880352
b.	GEAR BOX	352069
c.	SUPPRESSOR	352083
d.	MANIFOLD	1001608
e.	ROLLER GUIDE	352039
f.	DRIVE SPROCKET	352051
g.	MANDREL GUIDE	352053
h.	WICK CARRIER	352055
i.	WICK GUIDE BRACKET	852085
j.	CHECK VALVE MANIFOLD	352103

2. The spare parts list SECTION VIII - RECOMMENDED SPARE PARTS contains spare parts which may be very useful in keeping down-time to a minimum, especially in remote or secluded job sites where unforeseen communication problems could cause delay of the delivery of an awaited part.

These RECOMMENDED SPARE PARTS may be ordered beforehand, individually or as a package group as shown in the PARTS LIST.

Copyright © 2011 American Piledriving Equipment Inc. All Rights Reserved

PARTS LIST

BOTTOM DRIVE INSERTER 880352

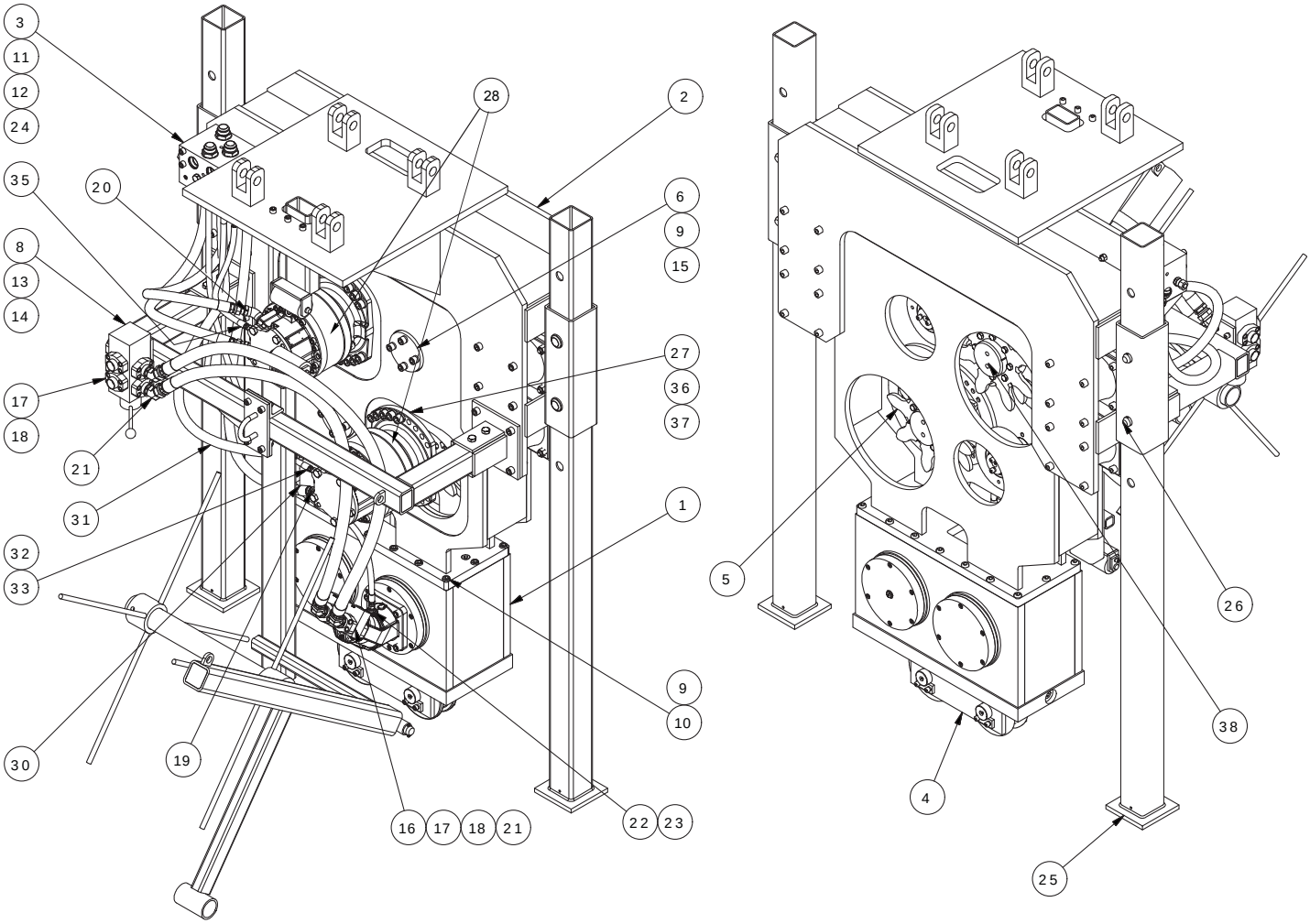

Copyright © 2011 American Piledriving Equipment Inc. All Rights Reserved

PARTS LIST

BOTTOM DRIVE INSERTER 880352

Item	Part Number	Qty.	Description
1	352069	1	GEAR BOX ASM
2	352083	1	SUPPRESSOR ASM
3	352019	1	100 WICK MANIFOLD ASM
4	352039	1	ROLLER GUIDE ASM
5	352051	2	DRIVE SPROCKET ASM
6	352053	2	MANDREL GUIDE ASM
7	352055	1	WICK CARRIER
8	352021	1	FEROY SELCTOR VALVE
9	*	24	0.75 HI COLLAR LOCK WASHER
10	*	16	0.75-10UNC X 2.25 SHCS
11	*	4	0.63-11UNC STOVER NUT
12	*	4	0.63-11UNC X 10.00 LG SHCS
13	*	4	0.50 HI COLLAR LOCK WASHER
14	*	4	0.50-13UNC X 1.50 LG SHCS
15	*	8	0.75-10UNC X 1.75 LG SHCS
16	352103	1	CHECK VALVE MANIF ASM
17	FITT	8	#20 PH SOLID #20 O-RING
18	100037	8	2-222 O-RING
19	FITT	1	FITT2S-20H16M
20	FITT	3	FITT2V-20H16M
21	FITT	4	FITT2V-20M20R
22	HOSE	2	HOSE125R13J020J020L09600
23	300099 FITT	1	FITT2S-08M10R000-000H001
24	HOSE	1	HOSE050R02J008J008L07900
25	FITT	1	FITT2T-08J08M08M
26	352129	2	LEG
27	352131	4	LEG PIN
28	352027	2	MANDREL DRIVE MOTOR
29	HOSE	1	HOSE100R13J016J016L04300
30	HOSE	1	HOSE100R13J016J016L04200
31	HOSE	1	HOSE100R13J016J016L06000
32	HOSE	1	HOSE100R13J016J016L05400
33	FITT	2	FITT2S-08M22MMR
34	HOSE	1	HOSE050R02J008J008L05100
36	HOSE	1	HOSE050R02J008J008L02600
37	*	20	0.88-9 UNC X 2.50 LG SHCS
38	*	20	0.88 HI COLLAR LOCK WASHER

*	352123	INCLUDED IN FASTENER KIT
FITT	352125	INCLUDED IN FITTING KIT
HOSE	352127	INCLUDED IN HOSE KIT

Copyright © 2011 American Piledriving Equipment Inc. All Rights Reserved

PARTS LIST

GEAR BOX 352069

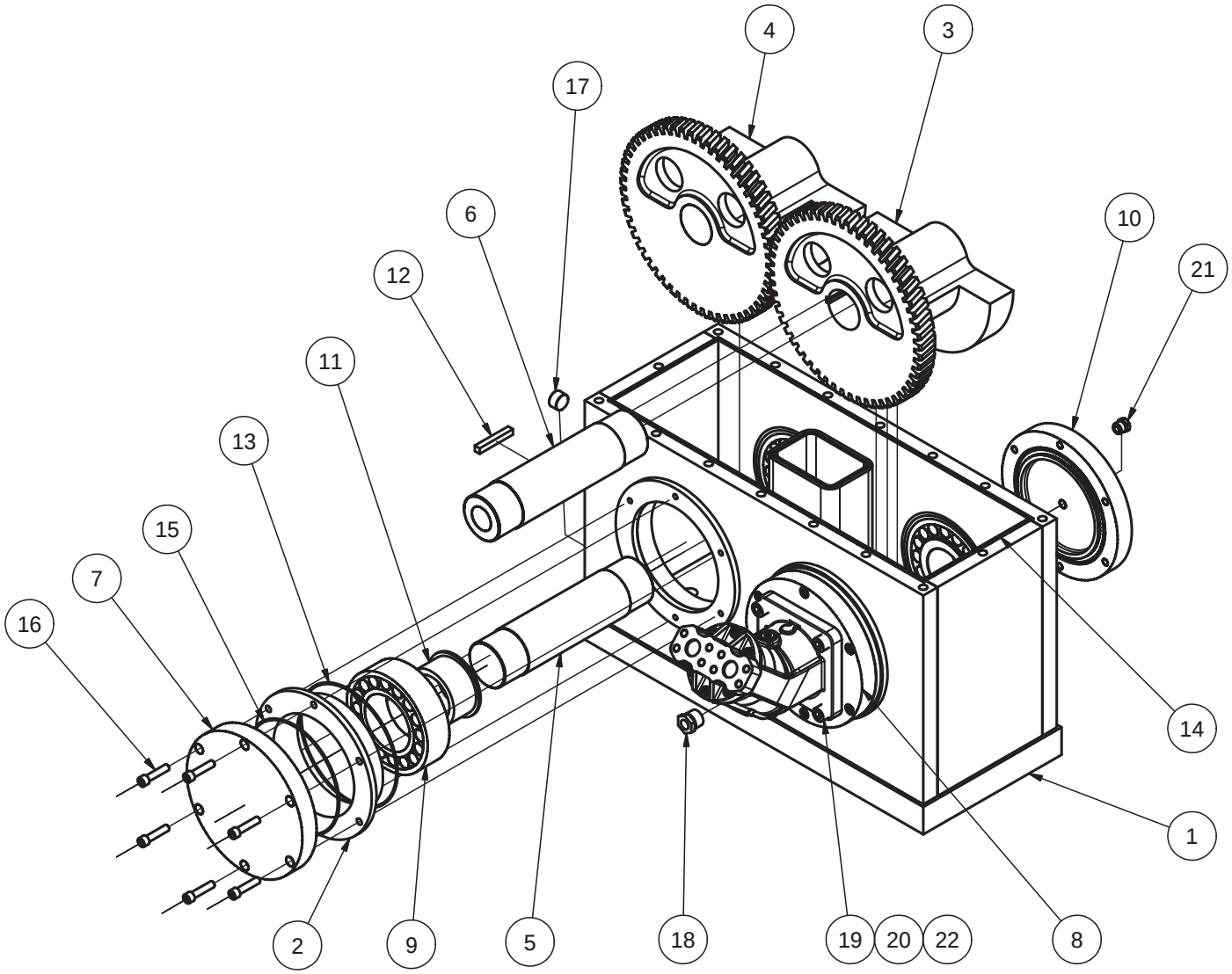

Copyright © 2011 American Piledriving Equipment Inc. All Rights Reserved

GEAR BOX 352069

Item	Part Number	Qty.	Description
1	352041	1	GEAR BOX FRAME
2	181002	4	BEARING CARRIER
3	352075	1	DRIVE ECC GEAR ASM
4	352043	1	ECC GEAR ASM
5	181003	1	ECCENTRIC SHAFT
6	352045	1	DRIVE SHAFT
7	181004	2	ECCENTRIC BEARING COVER
8	352011	1	BEARING COVER MOTOR MOUNT
9	181001A	4	ECCENTRIC BEARING
10	352077	1	BEARING COVER W BREATHER PORT
11	181005	4	BEARING SLEEVE
12	352065	1	KEY
13	352067 SEAL	4	2-274 O-RING
14	352079 SEAL	114	O-RING CORD 0.13 C.S. / INCH
15	352081 SEAL	4	2-272 O-RING
16	*	24	0.50-13UNC X 2.25 SHCS
17	123004 FITT	1	1” MAG PIPE PLUG
18	123005	1	SIGHT GLASS
19	*	4	0.75-10UNC X 1.50 SHCS
20	122001A	1	GEAR BOX MOTOR
21	122015	1	GEAR BOX BREATHER
22	352113 SEAL	1	2-163 O-RING
23	need#	2.7	GEAR LUBE / GAL

*	352123	INCLUDED IN FASTENER KIT
FITT	352125	INCLUDED IN FITTING KIT
SEAL		INCLUDED IN SEAL KIT

Copyright © 2011 American Piledriving Equipment Inc. All Rights Reserved

PARTS LIST

SUPPRESSOR 352083

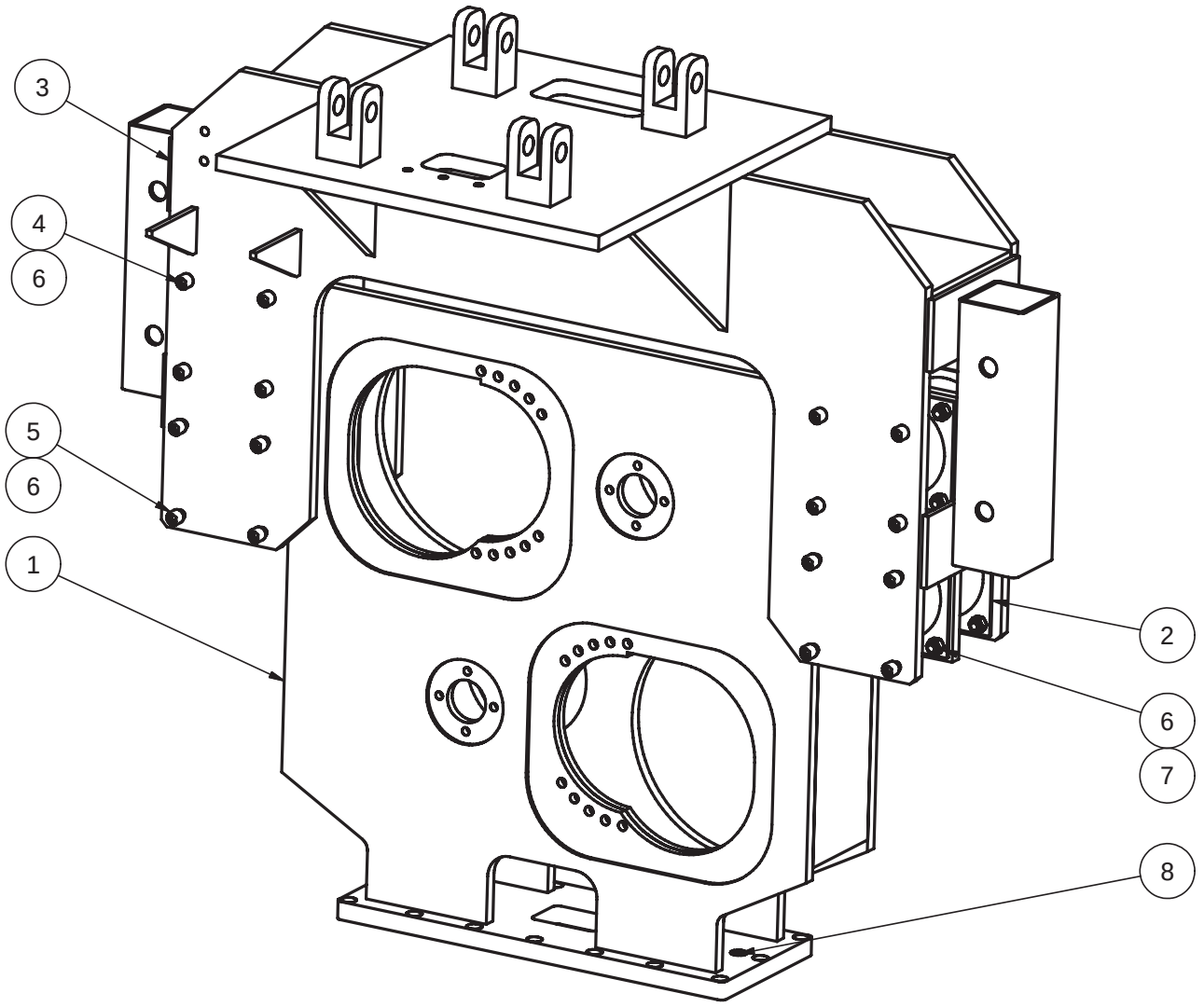

Copyright © 2011 American Piledriving Equipment Inc. All Rights Reserved

PARTS LIST

SUPPRESSOR 352083

Item	Part Number	Qty.	Description
1	352049	1	INNER SUPPRESSOR
2	321004A	8	ELASTOMER
3	352047	1	OUTER SUPP HOUSING
4	*	24	0.75-10UNC X 2.25 SHCS
5	*	8	0.75-10UNC X 3.00 SHCS
6	*	48	0.75-10UNC STOVER NUT
7	100067	16	0.75-10UNC X 2.50 SHCS
8	FITT	1	FITT2P-16P
*	352123		INCLUDED IN FASTENER KIT
FITT	352125		INCLUDED IN FITTING KIT

Copyright © 2011 American Piledriving Equipment Inc. All Rights Reserved

PARTS LIST

MANIFOLD 1001608

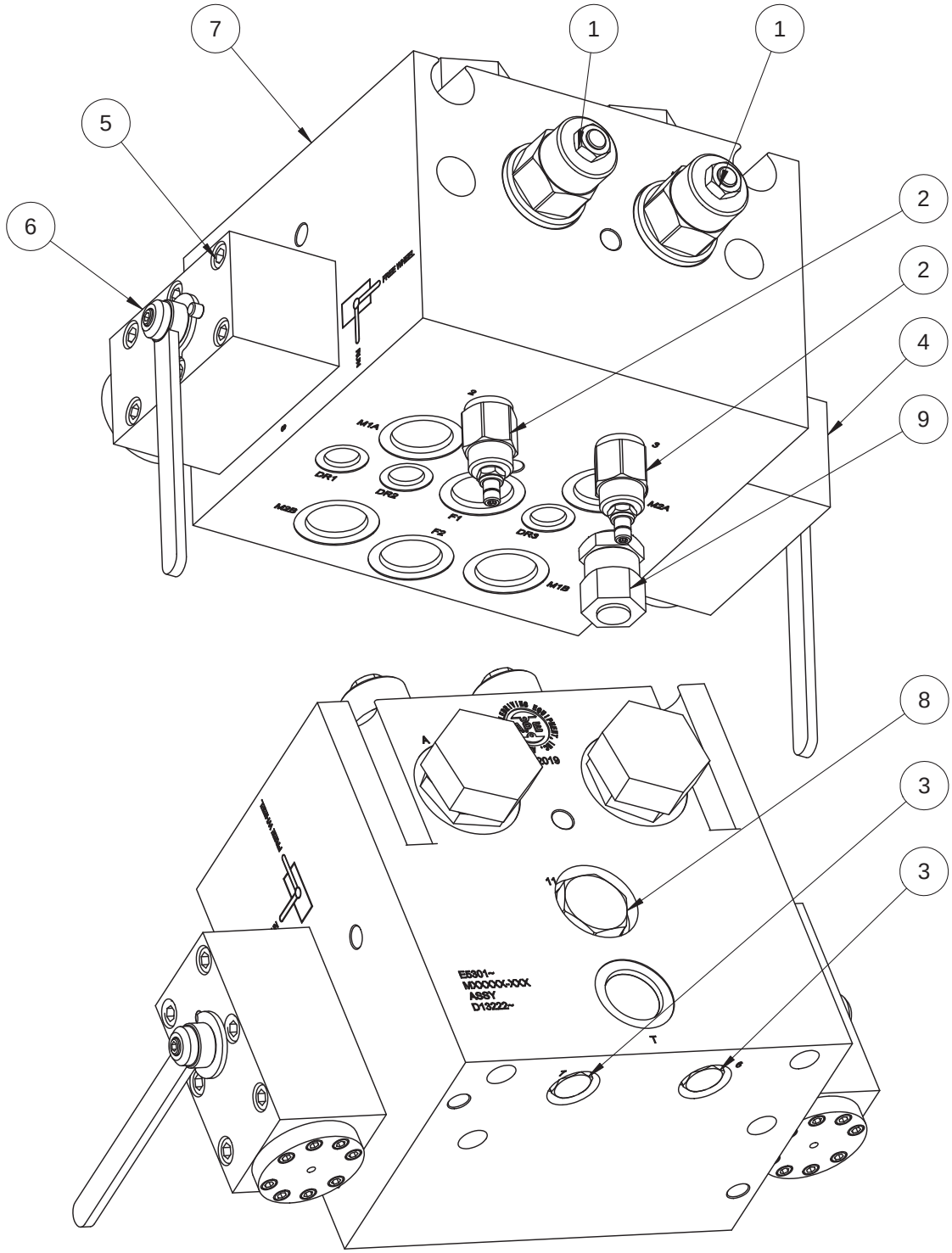

Copyright © 2011 American Piledriving Equipment Inc. All Rights Reserved

MANIFOLD 1001608

Item	Part Number	Qty.	Description
1	352117	2	COUNTER BALANCE VALVE
2	1000813	2	RELIEF VALVE
3	1001808	2	CHECK VALVE
4	1001635	1	FREE WHEEL VALVE RIGHT HAND
5	110913	12	0.38-16UNC X 3.00 LG SHCS
6	1001634	1	FREE WHEEL VALVE LEFT HAND
7	1001636	1	MANIFOLD BLOCK
8	1001826	1	CAVITY PLUG
9	321009	1	POP OFF VALVE

Copyright © 2011 American Piledriving Equipment Inc. All Rights Reserved

PARTS LIST

ROLLER GUIDE 352039

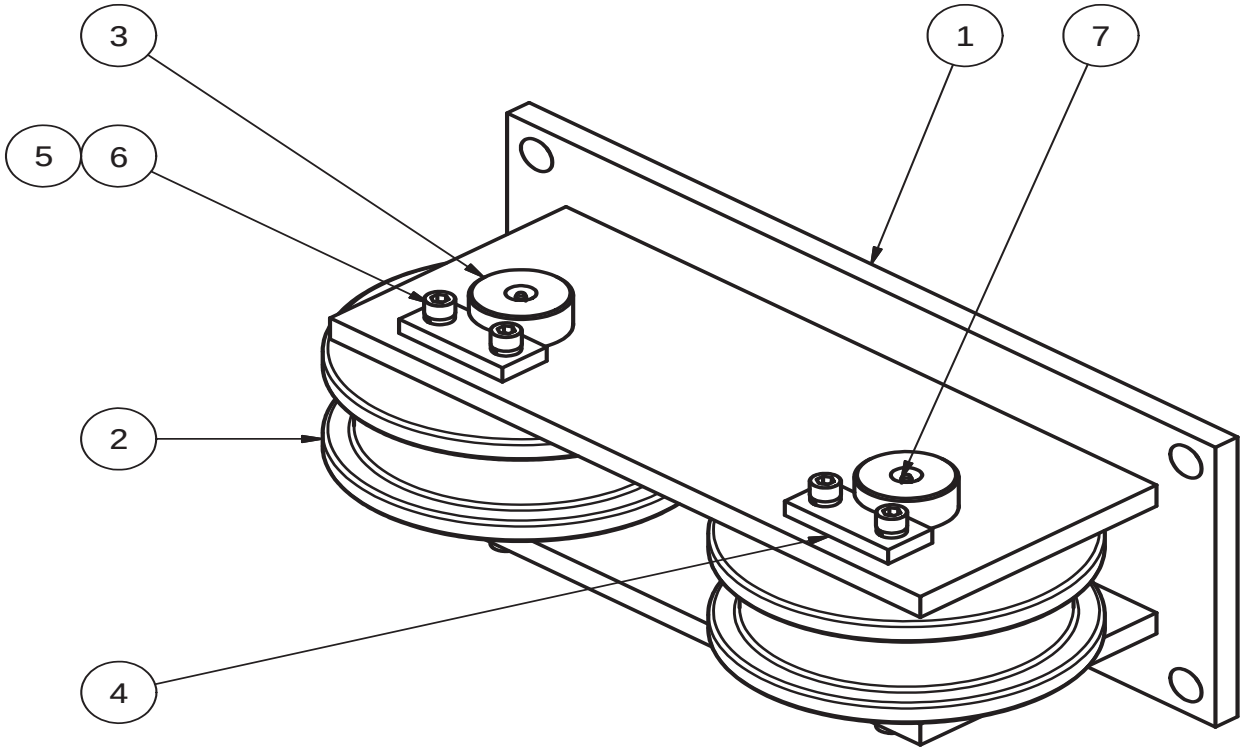

Copyright © 2011 American Piledriving Equipment Inc. All Rights Reserved

PARTS LIST

ROLLER GUIDE 352039

Item	Part Number	Qty.	Description
1	352132	1	GUIDE ROLLER FRAME
2	352025	2	GUIDE ROLLER w/ BUSHING
3	352026	2	GUIDE ROLLER PIN
4	352028	4	KEEP PLATE
5	*	8	0.50 HI COLLAR LOCK WASHER
6	*	8	0.50-13UNC X 1.25 SHCS
7	FITT	4	GREASE FITTING 0.13 NPT
*	352123		INCLUDED IN FASTENER KIT
FITT	352125		INCLUDED IN FITTING KIT

Copyright © 2011 American Piledriving Equipment Inc. All Rights Reserved

PARTS LIST

DRIVE SPROCKET 1005769

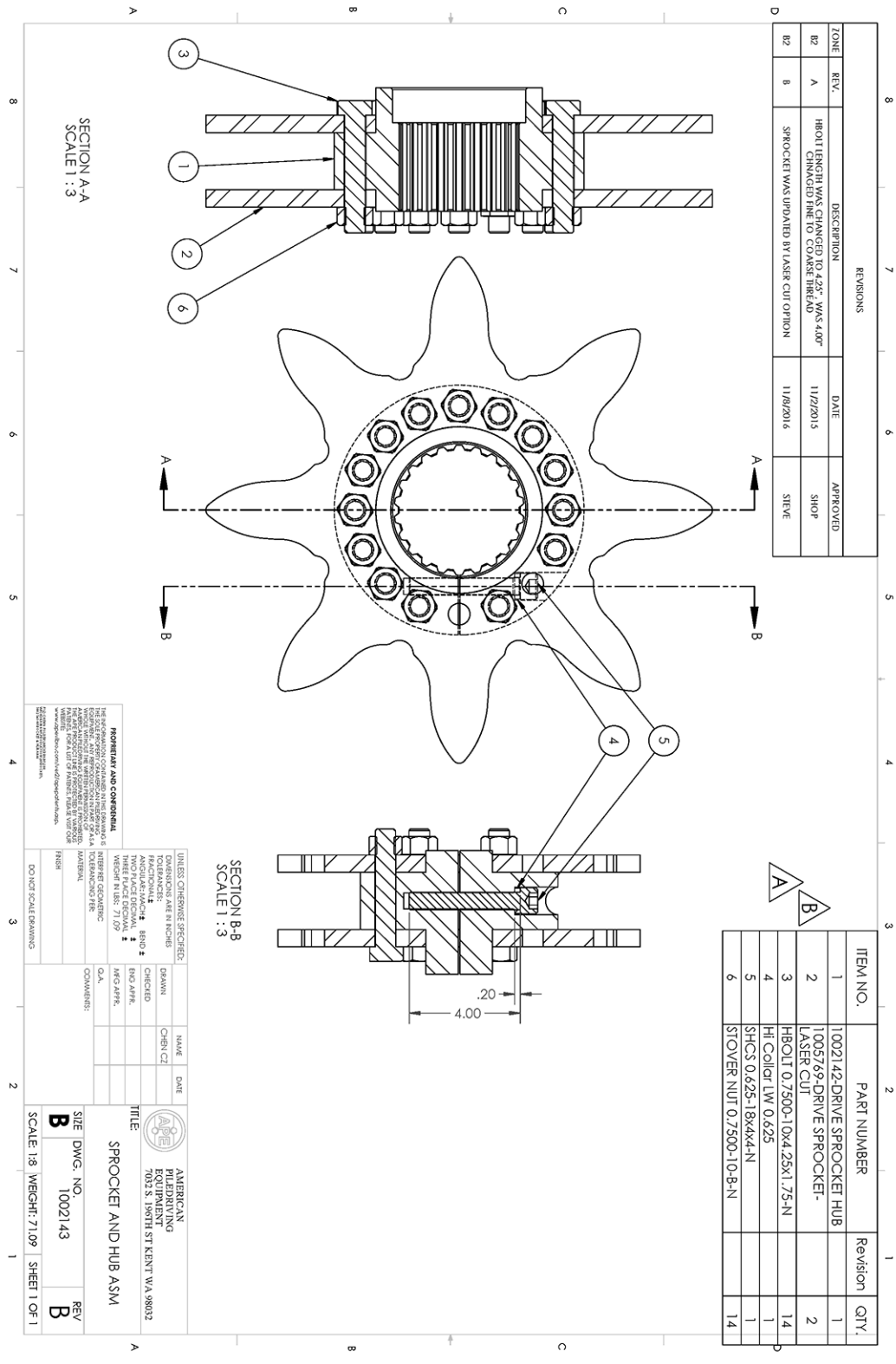

Copyright © 2011 American Piledriving Equipment Inc. All Rights Reserved

DRIVE SPROCKET 1005769

Item	Part Number	Qty.	Description
1	352000	2	DRIVE SPROCKET
2	352003	1	DRIVE HUB
3	*	8	0.63-11UNC X 4.00 HHCS
4	*	8	0.63-11UNC STOVER NUT
5	*	1	0.63-18UNF X 3.00 LG SHCS
*	352123		INCLUDED IN FASTENER KIT

DRIVE SPROCKET & HUB ASSEMBLY 1002143

Item	Part Number	Qty	Description
1	1002142	1	Drive Sprocket Hub
2	1005769	2	Drive Sprocket-Laser Cut
3	1005169		Bolt Kit
	Includes:	14	HBolt 3/4-10x4-1/43/4-N
		1	HCLW 0.625
		1	SHCS 0.625-18x4x4-N
		14	Stover Nut 3/4-10-B-N

Copyright © 2011 American Piledriving Equipment Inc. All Rights Reserved

PARTS LIST

MANDREL GUIDE 352053

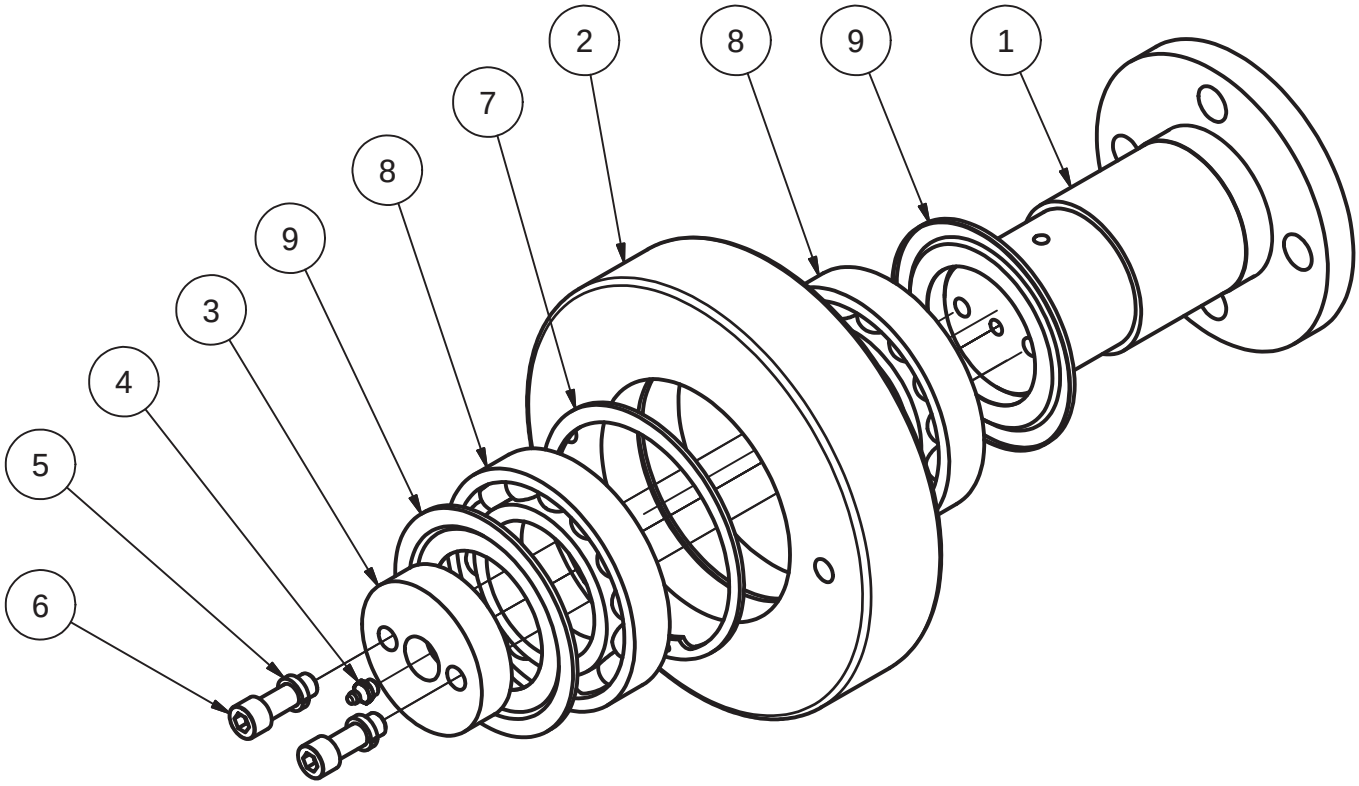

Copyright © 2011 American Piledriving Equipment Inc. All Rights Reserved

PARTS LIST

MANDREL GUIDE 352053

Item	Part Number	Qty.	Description
1	352014	1	MANDREL GUIDE SUPPORT PIN
2	352025	1	MANDREL GUIDE ROLLER
3	352007	1	END PLATE
4	FITT	1	GREASE FITTING 0.13 NPT
5	*	2	0.50 HI COLLAR LOCK WASHER
6	*	2	0.50-13UNC X 1.50 LG SHCS
7	352016	1	RETAINER RING
8	352015	2	BALL BEARING
9	352015A	2	NILOS RING
*	352123		INCLUDED IN FASTENER KIT
FITT	352125		INCLUDED IN FITTING KIT

Copyright © 2011 American Piledriving Equipment Inc. All Rights Reserved

PARTS LIST

WICK CARRIER 352055

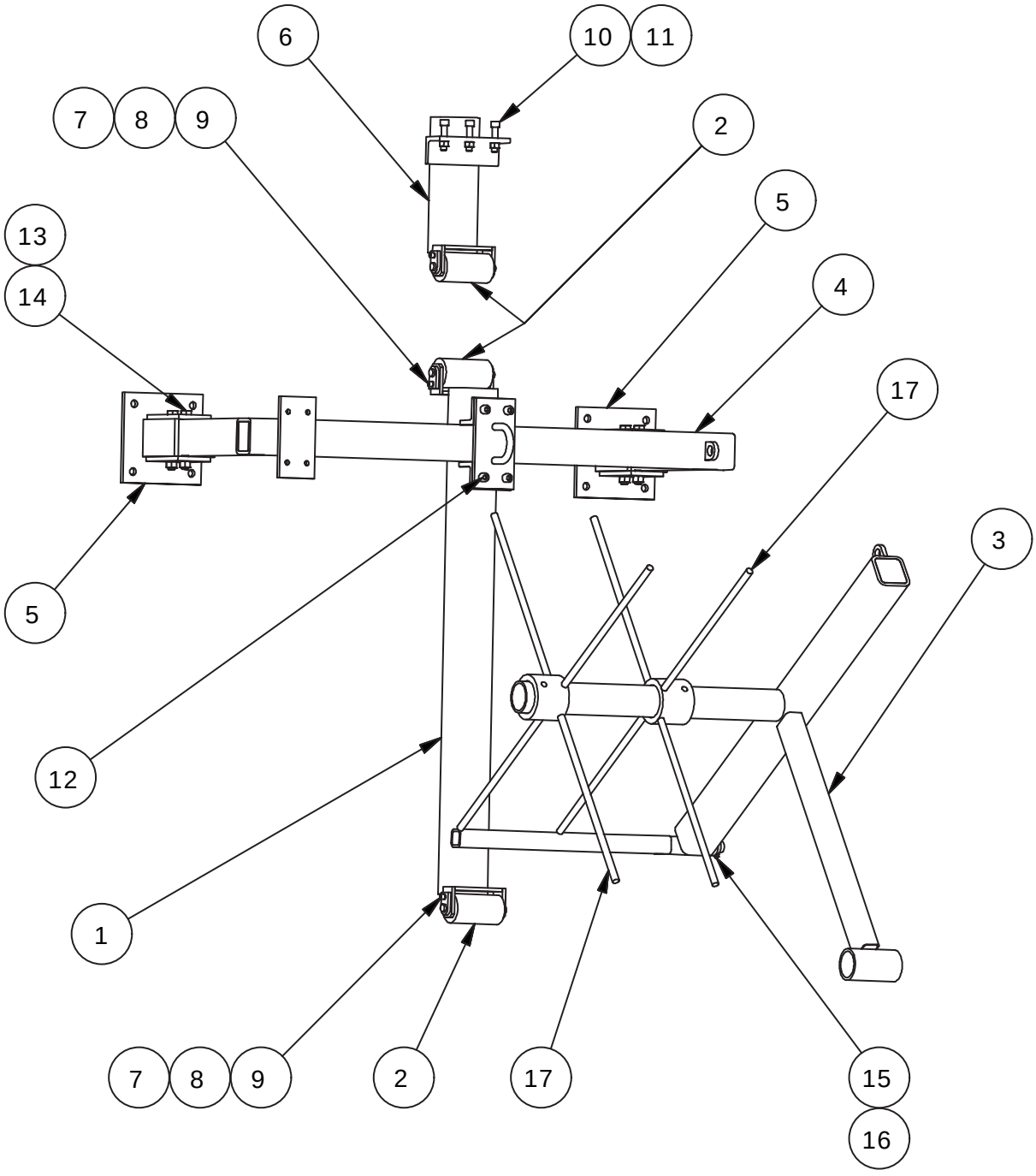

Copyright © 2011 American Piledriving Equipment Inc. All Rights Reserved

PARTS LIST

WICK CARRIER 352055

Item	Part Number	Qty.	Description
1	352137	1	6 ROLL MOUNT FRAME
2	352063	3	WICK SUPPORT ROLLER
3	352134	1	6 ROLL WICK CARRIER
4	352059	1	SUPPORT FRAME
5	352061	2	SUPPORT FRAME BRACKET
6	352095	1	MOUNT FRAME TOP
7	352097	3	MOUNT FRAME ROLLER PIN
8	*	3	0.38 HI COLLAR LOCK WASHER
9	*	3	0.38-16UNC X 0.75 LG SHCS
10	*	3	0.63-11UNC X 2.75 LG SHCS
11	*	7	0.63-11UNC STOVER NUT
12	*	4	0.63-11UNC X 2.00LG SHCS
13	*	4	0.75-10UNC HEX NUT
14	*	4	0.75-10UNC X 6.00 LG HHCS
15	*	1	0.25-20UNC X 2.00 LG SHCS
16	*	1	0.25-20UNC HEX NUT
17	352136	2	WICK BRACKET

* 352123 INCLUDED IN FASTENER KIT

Copyright © 2011 American Piledriving Equipment Inc. All Rights Reserved

PARTS LIST

WICK GUIDE BRACKET 852085

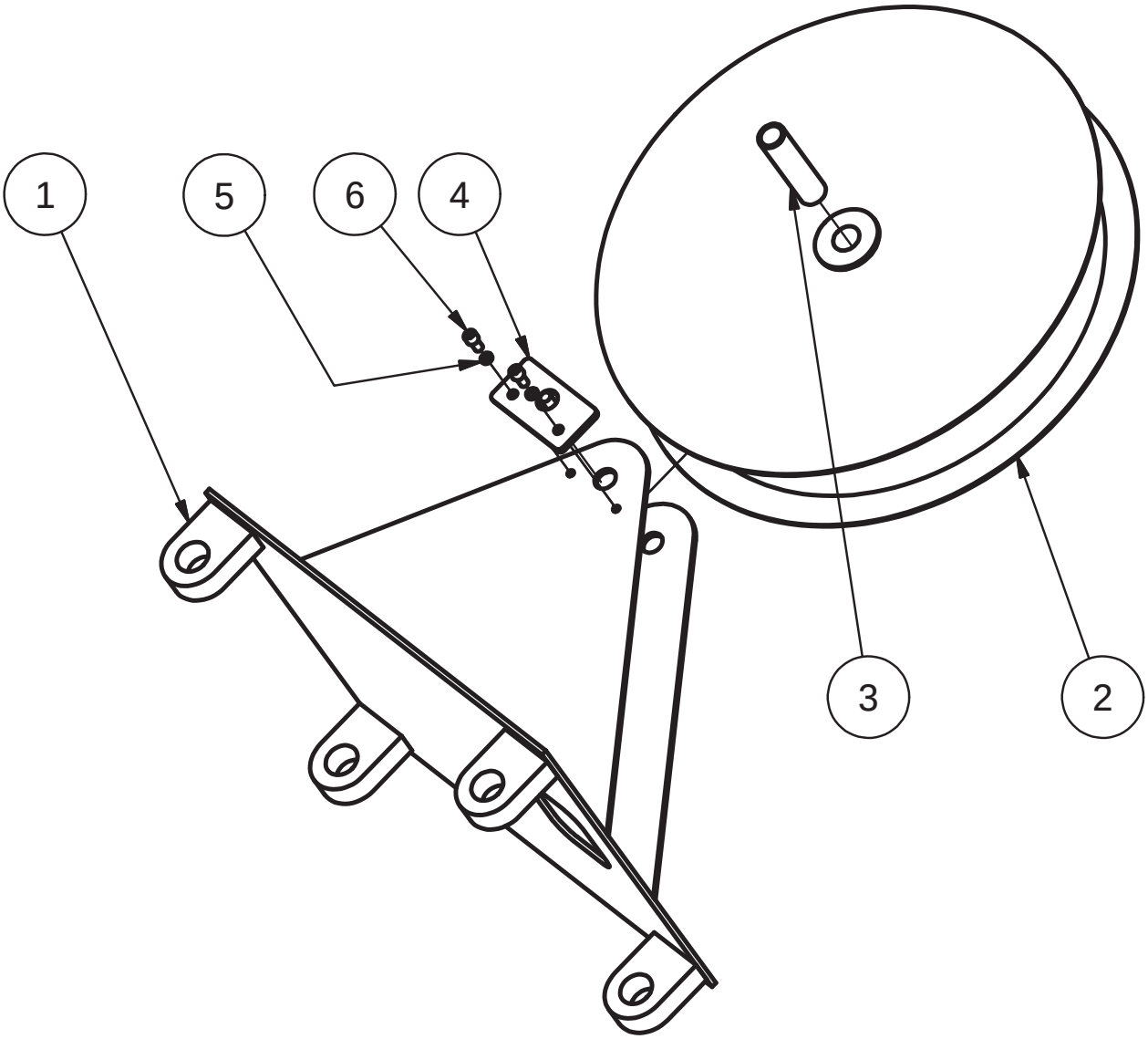

Copyright © 2011 American Piledriving Equipment Inc. All Rights Reserved

PARTS LIST

WICK GUIDE BRACKET 852085

Item	Part Number	Qty.	Description
1	352087	1	WICK GUIDE ROLLER BRACKET
2	352089	1	WICK GUIDE ROLLER
3	352091	1	BUSHING
4	352111	1	WICK GUIDE PIN
5	*	2	0.38 HI COLLAR LOCK WASHER
6	*	2	0.38-16UNC X 0.75 LG SHCS
*	352123		INCLUDED IN FASTENER KIT

Copyright © 2011 American Piledriving Equipment Inc. All Rights Reserved

PARTS LIST

CHECK VALVE MANIFOLD 352103

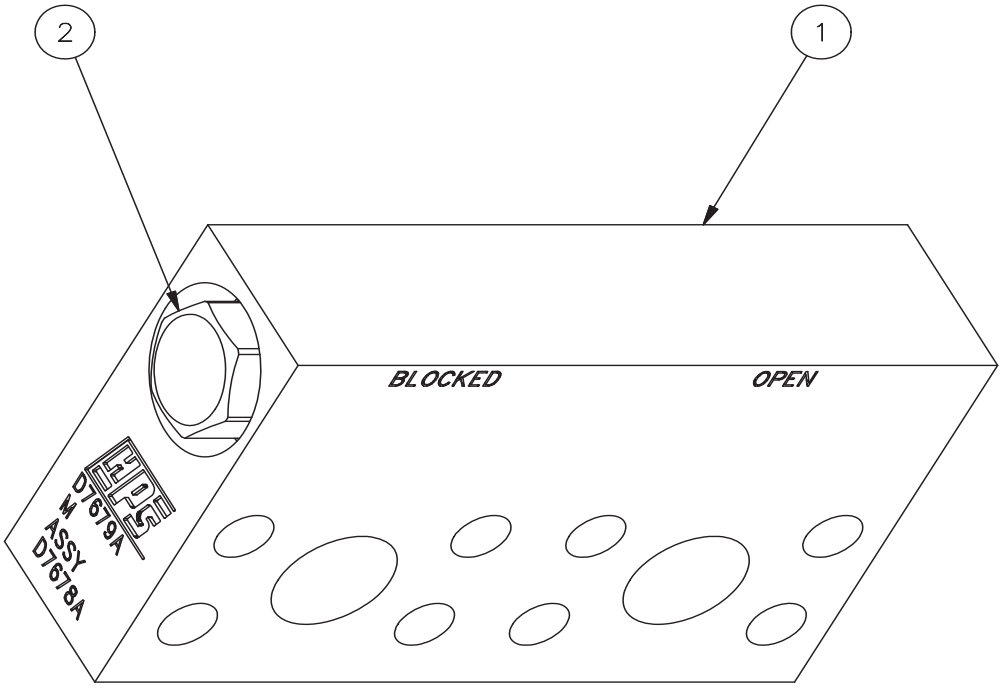

Copyright © 2011 American Piledriving Equipment Inc. All Rights Reserved

CHECK VALVE MANIFOLD 352103

Item	Part Number	Qty.	Description
1	325105	1	CHECK VALVE MANIFOLD
2	352107	1	CHECK VALVE

Copyright © 2011 American Piledriving Equipment Inc. All Rights Reserved

VIII. ORDERING PARTS

E. MISCELLANEOUS ACCESSORIES

1. Bulk

Part Number	Qty.	Description
810011	5 GAL	Vibration Case Lubricant
100298	1 GAL	APE / J&M Yellow Paint
100299	1 GAL	Primer

2. 100 Wick Hose Kit 352127

P/N	Qty.	Description
	2	HOSE125R13J020J020L09600
	1	HOSE050R02J008J008L07900

3. 100 Wick O-Ring Kit

P/N	Qty.	Description
100037	8	2-222 O-RING
352067	4	2-274 O-RING
352079	114	O-RING CORD 0.13 C.S. / INCH
352081	4	2-272 O-RING
352113	1	2-163 O-RING

Copyright © 2011 American Piledriving Equipment Inc. All Rights Reserved

VIII. ORDERING PARTS

F. RECOMMENDED SPARE PARTS

GEAR BOX 352069 Refer to page VIII-8

P/N	Qty.	Description
123005	1	Sight Gage
352113	1	O-Ring (2-163)
110142	1	Motor Shaft Seal
122001A	1	Hydraulic Motor
122015	1	Breather

SUPPRESSOR 352083 Refer to page VIII-10

P/N	Qty.	Description
321004	1	Elastomer

MANIFOLD 352019 Refer to page VIII-12

P/N	Qty.	Description
321009	1	Pop Off Relief Valve
1000808	1	Check Valve
1000813	1	Relief Valve
352117	1	Counter Balance Valve

WICK CARRIER 352055 Refer to page VIII-20

P/N	Qty.	Description
352063	2	WICK SUPPORT ROLLER
352097	1	MOUNT FRAME ROLLER PIN

Copyright © 2011 American Piledriving Equipment Inc. All Rights Reserved

PARTS LIST

Copyright © 2011 American Piledriving Equipment Inc. All Rights Reserved

G. RECOMMENDED TIGHTENING TORQUE

Nominal Screw Size	Nominal Socket Size	Tightening Torque Ft-Lbs. (Kg-M)	Nominal Screw Size	Nominal Socket Size	Tightening Torque Ft-Lbs. (Kg-M)
#10-24	5/32	6 Ft-Lbs. (.83 Kg-M)	#10-32	5/32	6 Ft-Lbs. (.83 Kg-M)
1/4-20	3/16	13 Ft-Lbs. (1.8 Kg-M)	1/4-28	3/16	15 Ft-Lbs. (2.1 Kg-M)
5/16-18	1/4	27 Ft-Lbs. (3.7 Kg-M)	5/16-24	1/4	30 Ft-Lbs. (4.2 Kg-M)
3/8-16	5/16	48 Ft-Lbs. (6.6 Kg-M)	3/8-24	5/16	55 Ft-Lbs. (7.6 Kg-M)
7/16-14	3/8	77 Ft-Lbs. (10.6 Kg-M)	7/16-20	3/8	86 Ft-Lbs. (11.9 Kg-M)
1/2-13	3/8	119 Ft-Lbs. (16.4 Kg-M)	1/2-20	3/8	133 Ft-Lbs. (18.4 Kg-M)
5/8-11	1/2	234 Ft-Lbs. (32.3 Kg-M)	5/8-18	1/2	267 Ft-Lbs. (36.9 Kg-M)
3/4-10	5/8	417 Ft-Lbs. (57.6 Kg-M)	3/4-16	5/8	467 Ft-Lbs. (64.5 Kg-M)
7/8-9	3/4	676 Ft-Lbs. (93.4 Kg-M)	7/8-14	3/4	742 Ft-Lbs. (102.5 Kg-M)
1-8	3/4	1,009 Ft-Lbs. (139.4 Kg-M)	1-12	3/4	1,126 Ft-Lbs. (155.6 Kg-M)
1-1/4-7	7/8	1,600 Ft-Lbs. (221.1 Kg-M)	1-1/4-12	7/8	1,800 Ft-Lbs. (248.8 Kg-M)
1-1/2-6	1	2,800 Ft-Lbs. (387 Kg-M)	1-1/2-12	1	3,000 Ft-Lbs. (414.6 Kg-M)

NOTE: These values are for Socket head cap screws only. Button heads, Flat heads and Set screws have different values. Check the Allen Hand Book for correct torque specifications.

Copyright © 2011 American Piledriving Equipment Inc. All Rights Reserved

MODEL 100
BOTTOM DRIVE
WICK INSERTER

PARTS LIST

Copyright © 2011 American Piledriving Equipment Inc. All Rights Reserved

ITEM NO.	PARTNO	DESCRIPTION	QTY.
1	1001670	20FT MANDREL ASM	2

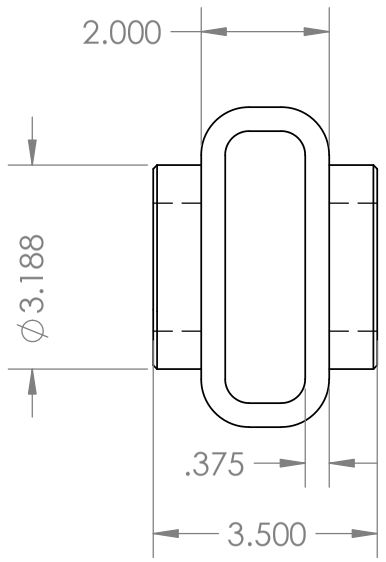

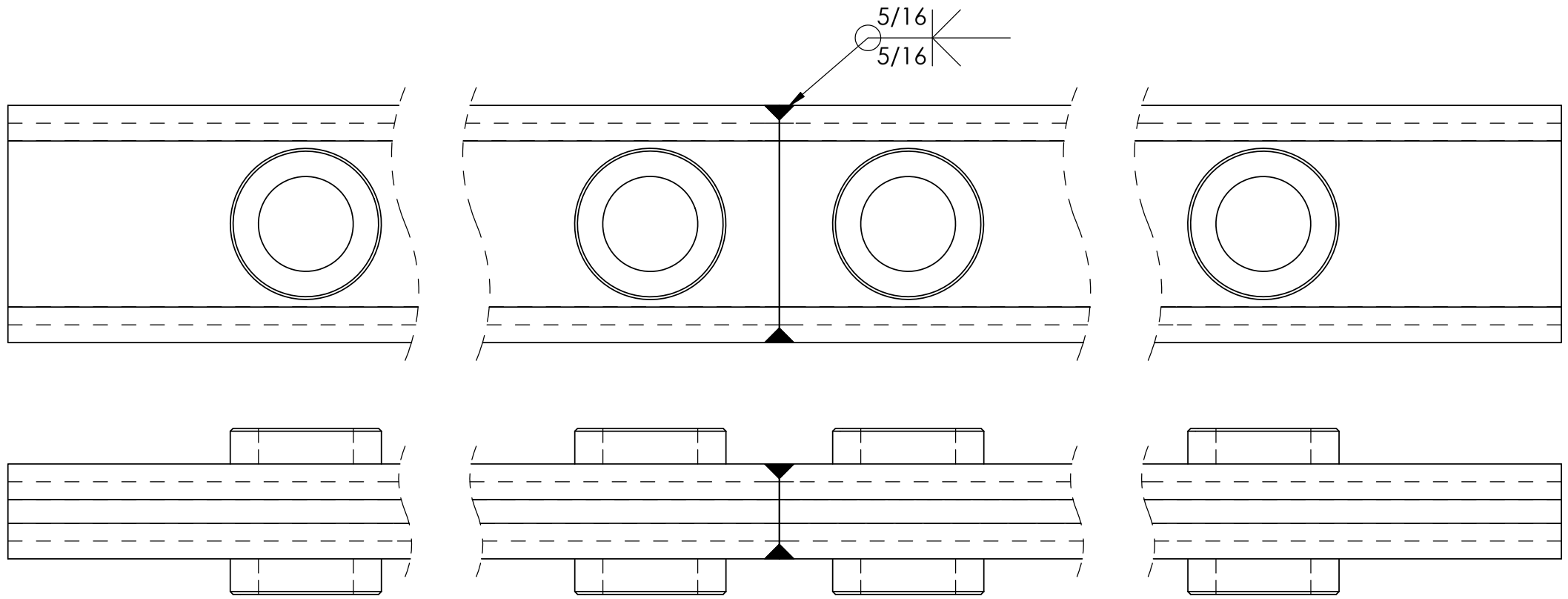

NOTE: 1,) MANDREL SPLICING ENDS HAVE TO BE
CHAMFERED BY 5/16 ALL AROUND;
2,) USING SPLICING TEMPLATE (DWG# 0204-050)
TO MATCH TWO SPLICING MANDRELS;
3,) USING ER70S-6 WELDING WIRE (OR EQUIVALENT) TO WELD;
4,) DEBURR AND GRIND OFF ALL EXCESSIVE WELD
AND SMOOTH ALL SURFACES.

PROPRIETARY AND CONFIDENTIAL

THE INFORMATION CONTAINED IN THIS DRAWING IS THE SOLE PROPERTY OFAMERICAN PILEDRIVING EQUIPMENT. ANY REPRODUCTION IN PART OR AS A WHOLE WITHOUT THE WRITTEN PERMISSION OF AMERICAN PILEDRIVING EQUIPMENT IS PROHIBITED. THE APE PRODUCT LINE IS PROTECTED BY VARIOUS PATENTS. FOR A LIST OF PATENTS, PLEASE VISIT OUR WEBSITE:
www.apevibro.com/ver2/apepatents.asp.

F:\Z-CHEN'S FOLDER\WICKDRAIN\200 WICKDRAIN SW\PRODUCTION\MANDREL\ 1008782-WICK DRAIN MANDREL SPLICE SPEC

UNLESS OTHERWISE SPECIFIED:	THIRD ANGLE PROJECTION	NAME	DATE
DIMENSIONS ARE IN INCHES TOLERANCES: FRACTIONAL ± 1/32 ANGULAR: ±.25° .X: ±0.02" .0X: ±0.01" .00X: ±0.005" WEIGHT IN LBS: 764.93	DRAWN	CHEN CZ	10/3/2018
	PRINTED ON		10/3/2018
	ENG APPR.		
	MFG APPR.		
	Q.A.		
INTERPRET GEOMETRIC TOLERANCING PER:	COMMENTS:		
MATERIAL:			
FINISH:			
DO NOT SCALE DRAWING			

AMERICAN
PILEDRIVING
EQUIPMENT
7032 S. 196TH ST KENT WA 98032

TITLE:

WICK DRAIN MANDREL
SPLICE SPEC

SIZE	DWG. NO.	REV
B	1008782	

SCALE: 1:96 | WT: 764.93 | SHEET 1 OF 1

Copyright © 2011 American Piledriving Equipment Inc. All Rights Reserved