This Wire Rope Lashing is standard practice for Local Piledriving Unions on the West Coast

This method includes all hammer sizes from the D19 up to a D100 with all drive cap sizes and pile insert sizes

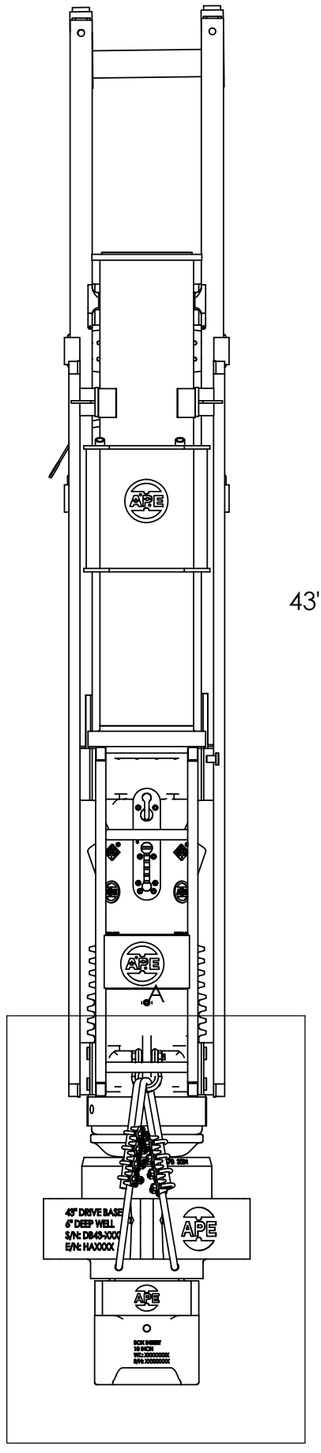

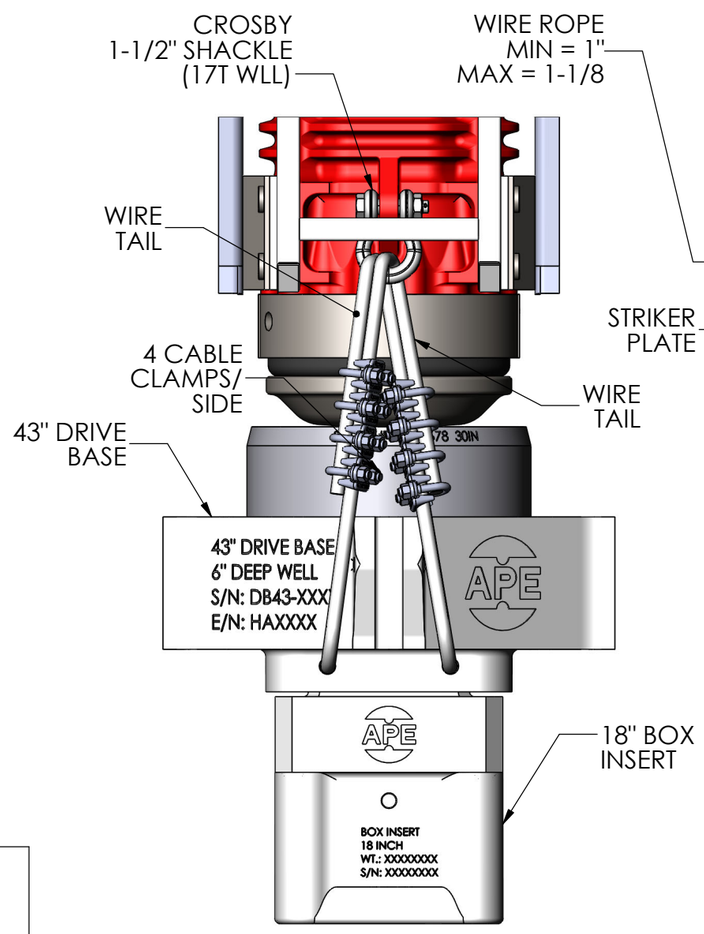

DETAIL A
SCALE 1 : 16

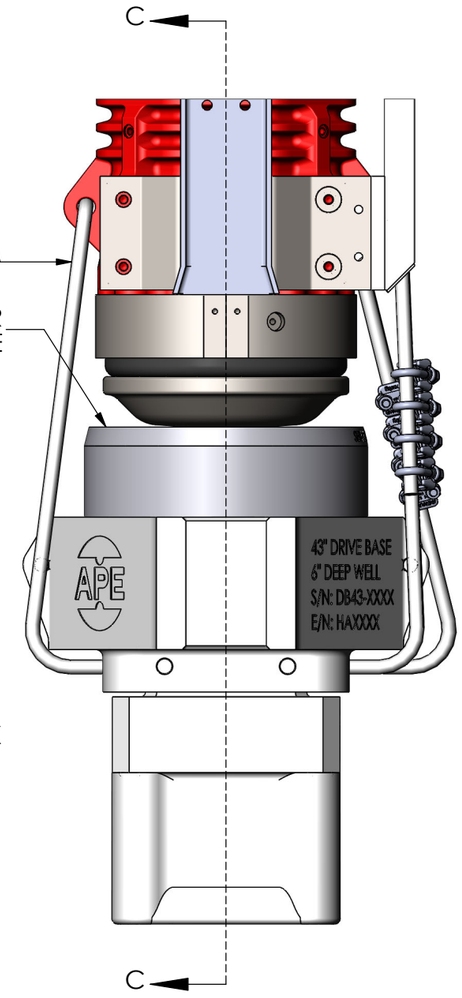

DETAIL B
SCALE 1 : 16

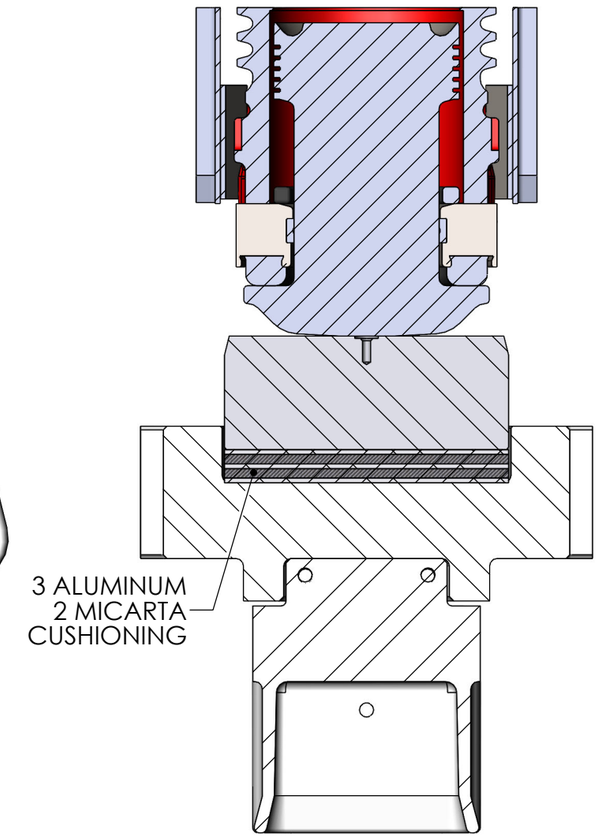

SECTION C-C
SCALE 1 : 16

AMERICAN
PILEDRIVING
EQUIPMENT

7032 S. 196TH ST.
KENT, WA 98032
1-800-248-8498
www.apevibro.com

TOLERANCES
EXCEPT AS NOTED

.X = ± .060
.XX = ± .030
.XXX = ± .010
FRAC = ± 1/16
ANGLE = ± .25°

PROPRIETARY AND CONFIDENTIAL

THE INFORMATION CONTAINED IN THIS DRAWING IS THE SOLE PROPERTY OF AMERICAN PILEDRIVING EQUIPMENT (APE). ANY REPRODUCTION IN PART OR WHOLE WITHOUT THE WRITTEN PERMISSION OF APE IS PROHIBITED. THE APE PRODUCT LINE IS PROTECTED BY VARIOUS PATENTS. FOR A LIST OF PATENTS, PLEASE VISIT OUR WEBSITE www.apevibro.com/ver2/apepatents.asp

	DATE	APPR.	BY	REVISION	SYM

PRODUCT/PROJECT:
D50 Setup

DESCRIPTION:
Lower End

MATERIAL:

DRAWN BY:	DATE:	WEIGHT (LB):	SIZE:
JMK	4/5/24	32327.4	B

PART NO:	REV:	SHEET	OF
		1	1

S:\Diesel\D46\D46 w_SP-DB-INSERT